+31 174 445 111 (Outside the US)
866-REXNORD (Within the US)
www.rexnord.com

Why Choose Rexnord?

When it comes to providing highly engineered products that improve productivity and efficiency for industrial applications worldwide, Rexnord is the most reliable in the industry. Commitment to customer satisfaction and superior value extend across every business function.

Delivering Lowest Total Cost of Ownership
The highest quality products are designed to help prevent equipment downtime and increase productivity and dependable operation.

Valuable Expertise
An extensive product offering is accompanied by global sales specialists, customer service and maintenance support teams, available anytime.

Solutions to Enhance Ease of Doing Business
Commitment to operational excellence ensures the right products at the right place at the right time.

Rexnord Company Overview
Rexnord is a growth-oriented, multi-platform industrial company with leading market shares and highly trusted brands that serve a diverse array of global end markets.

Process & Motion Control
The Rexnord Process & Motion Control platform designs, manufactures, markets and services specified, highly engineered mechanical components used within complex systems where our customers' reliability requirements and the cost of failure or downtime are extremely high.

Water Management
The Rexnord Water Management platform designs, procures, manufactures and markets products that provide and enhance water quality, safety, flow control and conservation.

©2018 Rexnord 10448149

Marbett® Components

Marbett Conveyor Components
Issue 16

10448149

FlatTop Catalog

Download the most up-to-date version at www.rexnord.com

Marbett Conveyor Components

Issue 16

CONVEYOR COMPONENTS

Chain Guide Components Page S002
Product Handling Components Page S045
Frame Support Components Page S140
Miscellaneous Components Page S156

S001 - S189

SUPPORTING AND LEVELLING ELEMENTS

Articulated Feet in Reinforced Polyamide Page R08
Articulated Feet Gripper Page R21
Articulated Feet in Steel Page R34
Fixed Feet in Steel Page R41
Threaded Bushings Page R42

R00 - R43

SELF-ALIGNING BEARINGS

Square Flange Bearing Units Page B04
Oval Flange Bearing Units Page B14
Pillow Block Type Bearing Units Page B22
Compact Pillow Block Type Bearing Units Page B26
Side Flange Bearing Units Page B28
Take-up Bearing Units Page B36
Round Flange Bearing Units Page B38

B00 - B59

The company

Rexnord is a global company supplying many industries with power transmission and conveying components. The product offering ranges from roller chains, couplings and geared products to conveyor chains, belts and components.
The head office is based in the United States, with several divisions all over the world. The Rexnord FlatTop division is manufacturing conveyor chains, belts and components.

Rexnord is fully committed to meet customer expectations; huge knowledge of the business reduces maintenance costs, eliminates redundant inventories and prevents downtime, all in close co-operation with OEMs and end users. This is a result of Rexnords focus on product development, application engineering, operations and customer service.

Rexnord FlatTop Europe represents 3 strong brands: Rexnord, MCC and Marbett.
With production facilities in ‘s-Gravenzande and Correggio, sales offices in The Netherlands end Italy, a large sales group for local service in many countries and distributors all over the world, Rexnord is always close to its customers. In this way a fast and reliable delivery is guaranteed.

Rexnord chains and belts are being used to convey a wide variety of products: bottles, cans, boxes, crates, tires, loose food, glass jars, PET containers, trays; shortly every transport in production halls in virtually any industry.
The product range has been split up over two catalogues, one for Rexnord/MCC Table Top/MatTop chains and one for Marbett conveyor components.

The industries served

As the handling specialist in the field of conveying, the Rexnord product portfolio is providing solutions for complete lines in several industries in order to improve productivity.

In beverage industry palletizers, depalletizers, washers, labelers, fillers, pasteurizers, inliners, outfeeds, elevators and accumulation tables are equipped with slatband chains, curves, sprockets, belts, bearings, leveling elements and many more conveyor components.

For the container manufacturing industry special products and materials are available, such as abrasion resistant polyamide for glass plants, vacuum chains for can making and gripper chains for vertical transport.

A wide range of products is also offered for blanchers, cookers, washers, coolers and processing lines in fruit, vegetables, bakery, confectionary etc. And many more products are available for the handling of packed food.

In automotive industry the products are engineered to meet the most demanding applications, such as rubber processing and tire handling.

This is just a short selection of the applications in which Rexnord products are being used. Among others they have also found their way into pharmaceutical production lines, battery manufacture, paper and cardboard production.

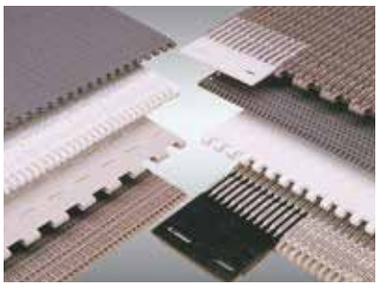
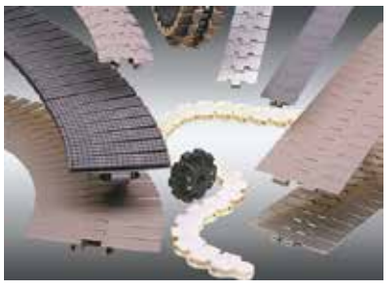

Rexnord and MCC TableTop chains and MatTop belts

The product line can be split up into:

• Steel slatband chains
In various materials ranging from carbon steel to special stainless steel with better wear and sliding properties; types straight running, sideflexing tab, bevel and Magnetflex, with and without rubber top.

• Plastic slatband chains
Wide range of materials and various executions; single hinge, double hinge, heavy duty, vacuum, lbp rollers and rubber top.

• Plate Top and Gripper chains
Based on the Rexnord roller chains in both stainless and carbon steel; Plate Top chains have steel or plastic top plates; Gripper chains have different types of rubber inserts.

• Case conveyor and Multiflex chains
Different types of acetal for both straight running and sideflexing transport of products varying from heavy crates to small juice packs.

• Curves
Magnetflex, Tab and bevel, as well as straight tracks to support the chain in all parts of the line; there are many standard versions besides the ability to make any special curve needed in your applications with short delivery times.

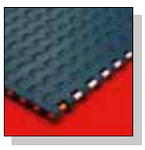

• Modular belts
Pitches differ from 0.5 to 2.25 inch to suit any application. Most series have both closed and open top executions; some also available with rubber top for inclined conveying.

Marbett conveyor components

The product line can be split up into:

• Chain guide components
Profiles, corner tracks, straight tracks, return rollers, serpentine, plugs for connections.

• Product handling components
Guide rails, roller guides, guide rail clamps, guide rail brackets and connecting clamps in plastic or stainless steel.

• Frame support components
Side mounting top brackets, bearing heads, support bases and connecting joints, stainless steel components.

• Supporting and leveling elements
Different versions in steel and plastic, articulated and fixed, with and without gripper bottom and vibration absorbing feet.

• Self-aligning bearings
Square, oval, pillow block, side flange, take-up, round, and other executions, all with open and closed unit. Lubricated for life versions are also available.

• Miscellaneous components Line control elements, hinges, locks, knobs, modular transfer roller plates, rollers, tensioners, nozzles, cable carriage chains, shaft collars and nose-over bars.

CHAIN GUIDE COMPONENTS

Chain Guide Profiles Page S002

Roller Guides for Chain Return Page S027

Serpentine Guides for Chain Return Page S036

Plugs for Connection Page S042

PRODUCT HANDLING COMPONENTS

Product-Guides Page S043

Guide-Rail Clamps Page S086

Guide-Rail Brackets Page S102

Connecting Clamps Page S118

FRAME SUPPORT COMPONENTS

Side Mounting top Brackets Page S122

Bearing Heads Page S124

Support Bases Page S126

Connecting Joints Page S180

Support Heads (Stainless steel) Page S130

Connecting Joints (Stainless steel) Page S134

MISCELLANEOUS COMPONENTS

Line Control Elements Page S136

Hinges Page S140

Locks Page S142

Tightening Elements Page S143

Modular transfer roller plate Page S146

Modular Nose-Over Bar Page S150

Shaft collars Page S152

Winding Tensioners Page S154

Side Guide Adjustment Page S156

TECHNICAL INFORMATION

Technical information Page S162

38716.Rexnord Catalog Marbett_2 - ENG II-XII_v4.indd 1 18-09-18 08:02

Chain Guide Profiles

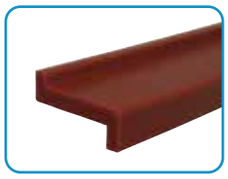

Part. S0262 - Pag. S002
Chain guide profile.

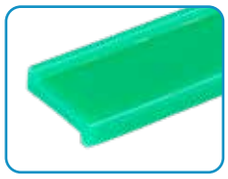

Part. S0241 - Pag. S003
Chain guide profile.

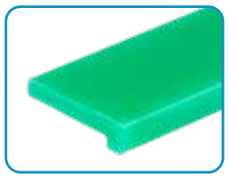

Part. S0243 - Pag. S003
Chain guide profile.

Part. S0822 - Pag. S004
Chain guide profile.

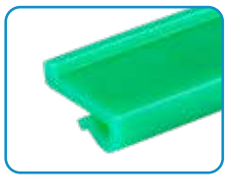

Part. S0825 - Pag. S004
Chain guide profile.

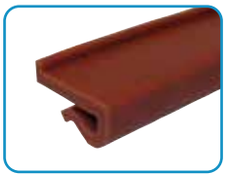

Part. S0251 - Pag. S005
Chain guide profile.

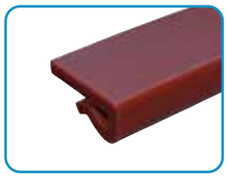

Part. S0261 - Pag. S005
Chain guide profile.

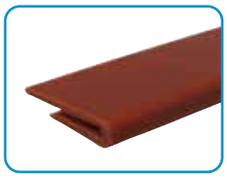

Part. S0840 - Pag. S006
Chain guide profile.

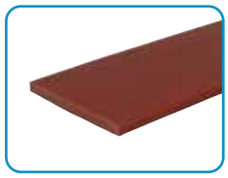

Part. S0244 - Pag. S006
Chain guide profile.

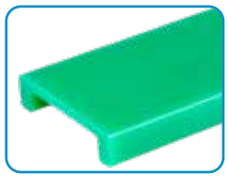

Part. S0784 - Pag. S007
Chain guide profile.

Part. S0362 - Pag. S007
Chain guide profile.

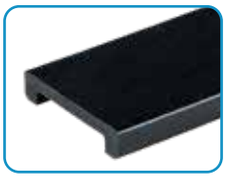

Part. S0387 - Pag. S008
Chain guide profile.

Part. S0634 - Pag. S010
Chain guide profile.

Part. S0814 - Pag. S010
Chain guide profile.

Part. S0885 - Pag. S013
Chain guide profile.

Part. S0366 - Pag. S014
Chain guide profile.

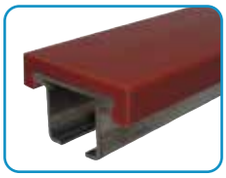

Part. S0367 - Pag. S014
Chain guide profile.

Part. S0368 - Pag. S015
Chain guide profile.

Part. S0885 - Pag. S015
Chain guide profile.

Part. S0858 - Pag. S016
Hinge Joint.

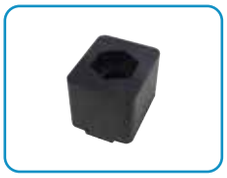

Part. S0371 - Pag. S017
Mounting block for
Part. S0366-S0367-S0368.

Part. S0550 - Pag. S018
Chain inlet guide for
Part. S0367.

Part. S0768 - Pag. S020
Chain guide profile.

Part. S0767 - Pag. S020
Chain guide profile.

Part. S0356 - Pag. S021
Chain guide profile.

Part. S0765 - Pag. S021
Chain guide profile.

Part. S0766 - Pag. S022
Chain guide profile
for modular chains.

Part. S0223 - Pag. S023
Chain guide profile for
roller chain ANSI 60.

Part. S0903 - Pag. S024
ViseClamp™.

Part. S0902 - Pag. S024
ViseSplice™.

Part. S0215 - Pag. S025
Clamp.

Part. S0275 - Pag. S025
Clamp.

Roller for Chain Return

Part. S0153 - Pag. S027
Snap-on wear shoe.

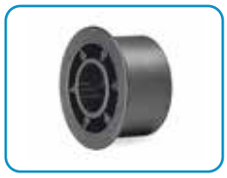

Part. S0073 - Pag. S028
Roller ø 42,5 mm. For K82,5.
For K82,5/pitch 83,5-88.

Part. S0126 - Pag. S028
Distance gear.

Part. S0421 - Pag. S029
Roller ø 42,5 mm. Multiple strands K82,5 / pitch 83,5.

Part. S0826 - Pag. S031
Roller.

Part. S0827 - Pag. S031
Guide flange.

Part. S0782 - Pag. S030
Double roller.
Ø 50 mm.

Part. S0556 - Pag. S032
Roller ø 60 mm. For K82,5. Multiple strand K82,5 / pitch 83,5-88.

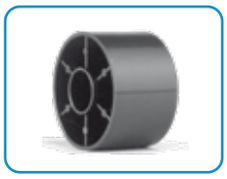

Part. S0554 - Pag. S032
Roller ø 60 mm. Multiple strands K82,5/pich 83,5-85.

Part. S0614 - Pag. S033
Roller ø 60 mm. For K82,5. Multiple strand K82,5 / pitch 83,5-88.

Part. S0613 - Pag. S033
Roller ø 60 mm. Multiple strand K82,5/pitch 83,5-85.

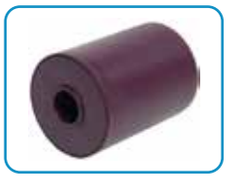

Part. S0758 - Pag. S034
Double roller.
Ø 60 mm.

Part. S0555 - Pag. S034
Guiding flange for part.
S0554-S0613-S0657-S0758.

Part. S0657 - Pag. S035
Roller ø 60 mm. Multiple strand K82,5 / pitch 85.

38716.Rexnord Catalog Marbett_2 - ENG II-XII_v4.indd 3 18-09-18 08:02

Serpentine Guides for Chain Return

Part. S0729 - Pag. S036
Chain return guide.

Part. S0524 - Pag. S036
Sliding profile.

Part. S0523 - Pag. S037
Spacer.

Part. S0533 - Pag. S039
Striker.

Expansion Plugs

Part. S0565 - Pag. S042
Expansion plug for tubes
ø 18-20 mm.

Product Guides

Part. S0771 - Pag. S043
Overhead transport PET bottles.

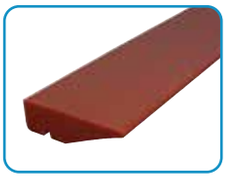

Part. S0594 - Pag. S045
Overhead transport PET bottles.

Part. S0654 - Pag. S045
Overhead transport PET bottles.

Part. S0715 - Pag. S045
Side guide. Delicate containers (PET empty).

Part. S0308 - Pag. S046
Overhead transport PET bottles.

Part. S0317 - Pag. S048
Half-round guide rail. Delicate containers (PET empty).

Part. S0223 - Pag. S048
Flat guide rail. Middle delicate containers (PET full).

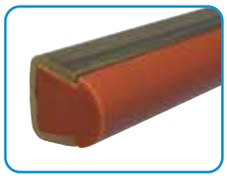

Part. S0219 - Pag. S049
Round guide rail. Middle strong containers (glass).

Part. S0247 - Pag. S049
Round guide rail. Middle strong containers (glass).

Part. S0346 - Pag. S050
Half-round guide rail.
Low side load (brick).

Part. S0770 - Pag. S051
Flat guide rail.
Rugged containers.

Part. S0768 - Pag. S052
Flat guide rail.
Rugged containers.

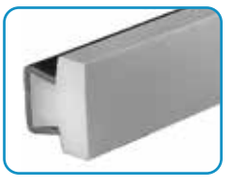

Part. S0767 - Pag. S052
Flat guide rail.
Rugged containers.

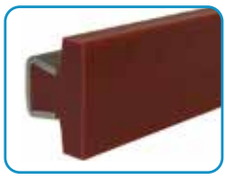

Part. S0273 - Pag. S053
Flat guide rail.
Rugged containers.

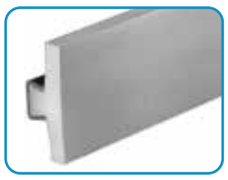

Part. S0765 - Pag. S053
Extra flat guide rail.

Part. S0422 - Pag. S054
Extra flat guide rail.
Rugged containers.

Part. S0369 - Pag. S054
Connecting bar for
Part.S0754-S0755-S0756-
S0757-S0656.

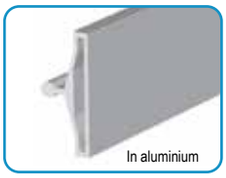

Part. S0643 - Pag. S056
Metal profile for
Part. S0642.

Part. S0645 - Pag. S057
Profile for round steel rods.

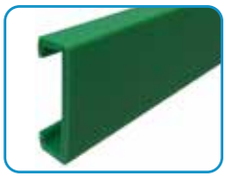

Part. S0539 - Pag. S057
Extra flat guide rail. Assembly
with 40x8 mmplate.

Part. S0191-S0296 - Pag. S058
Extra large guide rail.
Assembly with 60x6 mm plate.

Part. S0378-S0379 - Pag. S059
Joint clamp for
Part. S0191-S0296.

Part. S0581 - Pag. S060
Roller side guide.
Thin-walled containers.

Part. S0581 - Pag. S061
Roller side guide.
Thin-walled containers.

Part. S0580 - Pag. S062
Roller side guide.
Medium strength containers.

Part. S0557 - Pag. S062
Roller centre guide.
Medium strength containers.

Part. S0570 - Pag. S063
Divider module for
Part. S0557.

Part. S0580 - Pag. S064
Roller side guide.
Medium strength containers.

Part. S0537 - Pag. S065
Metal profile 40x8.

Part. S0535 - Pag. S065
Bolts set for Part. 535.

Part. S0757 - Pag. S066
Roller side guides with
cylinder rollers, in aluminium.

Part. S0755 - Pag. S067
Centre guides with cylinder rollers, in aluminium.

Part. S0757 - Pag. S068
Roller side guides with cylinder rollers, in aluminium.

Part. S0755 - Pag. S069
Centre guides with cylinder rollers, in aluminium.

Part. S0868 - Pag. S070
Roller side guides with cylinder rollers, in aluminium.

Part. S0869 - Pag. S071
Centre guides with cylinder rollers, in aluminium.

Part. S0868 - Pag. S072
Roller side guides with cylinder rollers, in aluminium.

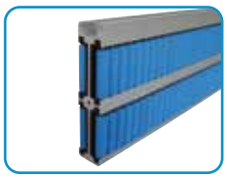

Part. S0869 - Pag. S073
Centre guides with cylinder rollers, in aluminium.

Part. S0756 - Pag. S074
Pearl™ roller side guide in aluminium.

Part. S0754 - Pag. S075
Pearl™ roller centre guide in aluminium.

Part. S0756 - Pag. S076
Pearl™ roller side guide in aluminium.

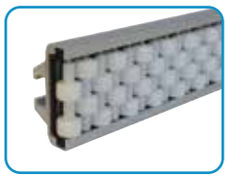

Part. S0856 - Pag. S078
Roller side guides in aluminium.

Part. S0857 - Pag. S079
Roller centre guides in aluminium.

Part. S0852 - Pag. S081
Separation Block.

Part. S0854 - Pag. S081
Separation Block.

Part. S0760 - Pag. S080
Separation Block.

Part. S0128S - Pag. S082
Sideflexing Roller side guide.
Rugged containers.

Part. S0128 - Pag. S082
Roller side guide.
Rugged containers.

Part. S0128 - Pag. S082
Roller side guide.
Rugged containers.

Part. S0128 - Pag. S085
Roller side guide.
Rugged containers.

Part. S0218 - Pag. S085
Guide rail bending machine (manual).

Guide Rail Clamps

Part. S0210P - Pag. S086
Guide rail clamp.

Part. S0275 - Pag. S087
Guide rail clamp.

Part. S0211 - Pag. S087
Guide rail clamp
(adjustable).

Part. S0213 - Pag. S088
Guide rail clamp
(double).

Part. S0213 - Pag. S088
Guide rail clamp
(double).

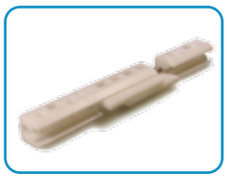

Part. S0736-S0737-S0738
Pag. S089
Sliding joint clamp.

Part. S0903 - Pag. S091
ViseClamp™.

Part. S0215 - Pag. S091
Guide rail clamp.

Part. S0694 - Pag. S090
Guide rail clamp
with two fixing screw.

Part. S0217 - Pag. S090
Guide rail clamp
(double).

Part. S0237 - Pag. S092
Guide rail clamp
(adjustable).

Part. S0082P - Pag. S094
Guide rail clamp.

Part. S0159-S0437 - Pag. S095
Guide rail clamp
(adjustable).

Part. S0071 - Pag. S096
Guide rail clamp
(double).

Part. S0070 - Pag. S096
Guide rail clamp
(double).

Part. S0698 - Pag. S097
Guide rail clamp
with two fixing screws.

Part. S0662 - Pag. S097
Guide rail clamp.

Part. S0050 - Pag. S098
Guide rail clamp
(double).

Part. S0190 - Pag. S100
Guide rail clamp.

Part. S0184 - Pag. S100
Guide rail clamp.

Part. S0298 - Pag. S101
Guide rail clamp.

Part. S0298 - Pag. S101
Guide rail clamp.

38716.Rexnord Catalog Marbett_2 - ENG II-XII_v4.indd 7 18-09-18 08:03

Guide- Rail Brackets

Part. S0708 - Pag. S102
Bracket with eyebolt.

Part. S0107 - Pag. S103
Bracket with eyebolt.

Part. S0617 - Pag. S103
Bracket with eyebolt.

Part. S0140 - Pag. S104
Bracket with eyebolt.

Part. S0632 - Pag. S105
Adjustable bracket.

Part. S0637 - Pag. S106
Adjustable bracket.

Part. S0862 - Pag. S107
Swivel head.

Part. S0256 - Pag. S107
Swivel head.

Part. S0192 - Pag. S108
Swivel head.

Part. S0061 - Pag. S110
Spacer.

Part. S0725 - Pag. S111
Spacer.

Part. S0226-S0336 - Pag. S112
Drip tray support.
Straight Rod.

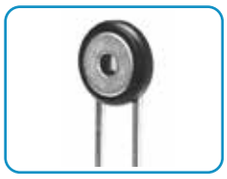

Part. S0338 - Pag. S113
Mounting plate for
Part. S0226-S0336.

Part. S0699 - Pag. S115
Side bracket.

Part. S0692 - Pag. S114
Side bracket.

Part. S0661 - Pag. S116
Cross clamp.

Part. S0732 - Pag. S116
Cross clamp
with Quick-Set.

Part. S0763 - Pag. S117
T - clamp with eyebolt,
with knob.

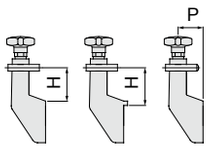

Adjustable Brackets Part.	Fixed Brackets Part.			
S0704+S0192 (S0699+S0192)	-	42,5	35,5	52 (128)
-	S0708	42,5	-	67,5
S0704+S0192 (S0699+S0192)	-	60	53	52 (128)
-	S0081-S0088	-	58	36
-	S0705	61	61	31
-	S0107	-	64,5	45
-	S0708	64,5	-	67,5
S0682-S0677	-	67	-	65
-	S0072-S0089	67	-	42,8
S0635-S0637-S0638 (S0650-S0652-S0653)	-	68	-	64 (48)
-	S0599	68	-	64
S0679	-	70	-	65
S0704+S0192 (S0699+S0192)	-	80	73	52 (128)
-	S0140	81	-	50
-	S0085	84,5	-	42
S0636 (S0651)	-	86	-	64 (48)
-	S0097-S0010	86	-	42
-	S0617	87	-	49
S0679	-	87,5	-	65
S0542-S0543-S0544	-	90	86	51
S0681	-	105,5	-	65
S0679	-	107,5	-	65
S0541	-	108	104	51
S0704+S0192 (S0699+S0192)	-	110	103	52 (128)
S0681	-	123	-	65
S0679	-	137,5	-	65
S0681	-	143	-	65
S0704+S0192 (S0699+S0192)	-	150	143	52 (128)
S0681	-	173	-	65
S0679	-	177,5	-	65
S0681	-	213	-	65

P = to increase the distance use the proper spacer

Connecting Clamps

Part. S0340 - Pag. S118
Cross clamp.
Round and square holes.

Part. S0174 - Pag. S118
Cross clamp. Round hole.

Part. S0339 - Pag. S120
T clamp.

Part. S0786 - Pag. S121
Cross clamp.

Part. S0786 - Pag. S121
Cross Clamp,
with knob.

38716.Rexnord Catalog Marbett_2 - ENG II-XII_v4.indd 9 18-09-18 08:03

Side Mounting top Brackets

Part. S0199 - Pag. S122
Side mounting top bracket for tubes ø 48,3-50,8 square 38-40.

Part. S0685 - Pag. S135
Side mounting top bracket for tubes ø 48,3-50,8-60,3.

Bearing Heads

Part. S0198 - Pag. S124
Bearing head for tubes ø 48,3-50,8 square 38-40.

Part. S0280 - Pag. S125
Bearing head for tubes ø 48,3-50,8-60,3.

Support Bases

Part. S0615 - Pag. S126
Support base for tubes ø 38,1-42,4-48,3-50,8-60,3.

Part. S0618 - Pag. S127
Support base for tubes ø 38,1-42,4-48,3-50,8-60,3.

Part. S0611 - Pag. S127
Support base for tubes square 40-50-60.

Part. S0619 - Pag. S128
Support base for tubes ø 42,4-48,3-50,8-60,3.

Part. S0616 - Pag. S129
Support base for tubes ø 42,4-48,3-50,8-60,3.

Connecting Joints

Part. S0562 - Pag. S130
Connecting joint for tubes ø 33,7-38,1-42,4-48,3.

Part. S0563 - Pag. S130
Connecting joint for tubes ø 50,8-60,3.

Part. S0137 - Pag. S132
Connecting joint for tubes ø 48,3-60,3.

Part. S0686 - Pag. S134
Connecting joint for tubes ø 48,3.

Line Control Elements

Part. S0342 - Pag. S136
Assembly kit for photocells or sensors

Part. S0341 - Pag. S136
Assembly kit for photocells or sensors

Part. S0372 - Pag. S138
Universal clamp for photocells or reflectors.

Part. S0518 - Pag. S139
Control contact lever.

Hinges and Locks

Part. S0337 - Pag. S140
270° hinge.

Part. S0260 - Pag. S140
170° hinge.

Part. S0272 - Pag. S142
Lock.

Tightening Elements

Part. S0303 - Pag. S143
Ratchet handle clamping.

Part. S0182 - Pag. S144
Tightening knob.

Part. S0183 - Pag. S144
Tightening knob.

Part. S0185 - Pag. S145
Tightening knob.

Modular transfer roller plate

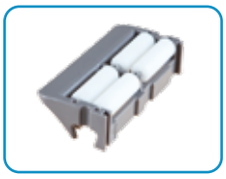

Part. S0846 - Pag. S148
End transfer module (with lip).

Part. S0847 - Pag. S148
End transfer module (with lip).

Part. S0848 - Pag. S148
End transfer module (with lip).

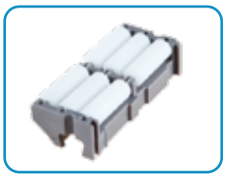

Part. S0849 - Pag. S148
End transfer module.

Part. S0850 - Pag. S148
Assembly bar.

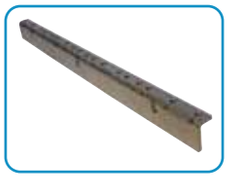

Part. S0864 - Pag. S148
L Profile.

Part. S0567 - Pag. S146
End transfer module (with lip).

Part. S0672 - Pag. S146
End transfer module (with lip).

Part. S0569 - Pag. S147
End transfer module.

Part. S0568 - Pag. S147
Centre transfer module.

Part. S0063-S0095
Pag. S083
Roller.

38716.Rexnord Catalog Marbett_2 - ENG II-XII_v4.indd 11 18-09-18 08:03

Modular Nose-Over Bar

Part. S0905 - Pag. S150
Dynamic "Nose-Over" bar standard profile.

Part. S0905 - Pag. S151
Modular "Nose-Over" bar standard profile.

Part. S0905 - Pag. S151
Modular "Nose-Over" bar low profile.

Shaft collars

Part. S0612 - Pag. S152
Split shaft collar (with round bore).

Part. S0612 - Pag. S153
Split shaft collar (with square bore).

Winding Tensioners

Part. S0075 - Pag. S154
Winding tensioner.

Side Guide Adjustment

Part. S0837 - Pag. S156
Side Guide Adjustment.

Notes

www.rexnord.com

Please contact our Application Engineers at +31 174 445 111 for assistance with product selection.

38716.Rexnord Catalog Marbett_3 - ENG S001-S042 blauw_v9.indd 1 18-09-18 08:05

Part. S0262

Chain - guide profile

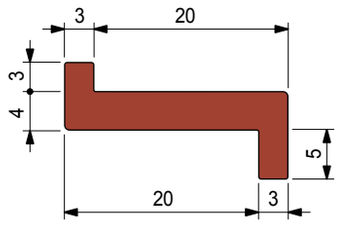

Material UHMWPE	Packaging metres	Code
ULF™ brown red	45	**UL640913**
Black	45	**63651**

- Standard packaging: coil.

- **Material:** Polyethylene UHMWPE with molecular density 5.600.000 g/mol.
  Characteristics: new material Polyethylene ULF™ brown red (UHMWPE): reduced friction coefficient, higher wear resistance.
- **Linear expansion coefficient:** 2 x 10^{-4} °C^{-1}
  Calculation of thermal expansion see Technical information.
- **Operating temperature Green Black:**
  In air (- 40 to + 80 °C).
  In hot water (+ 70 °C).
- **Operating temperature ULF™ brown red:**
  In air (- 40 to + 45 °C).
  In hot water (+ 45 °C).
- **Polyethylene ULF™ is FDA approved**
  Polyethylene ULF™ complies with the Code of Federal Regulations Title 21, § 177.1520 "Olefin Polymers" of the Food and Drug Administration (FDA) of April 1, 2008.
- **Coefficient of friction between chain POM and wearstrip ULF™:** 0,08.
  Note: for calculation of chain pull refer to Technical Support.
- **Position of guides.** See Technical information.

- **TableTop®** chains series 812 - 815 - 820 - 831 - 881TAB - 8811TAB - 879TAB - 880TAB

Chain width 82,5 mm (K 325) / Guide clearance 45 mm

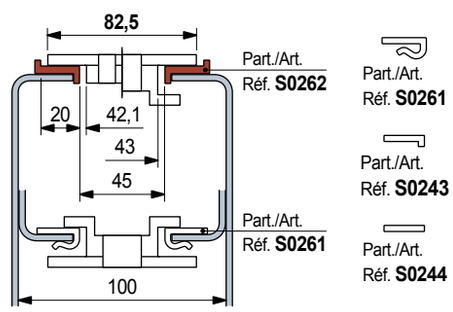

Chain width 114,3 mm (K 450)

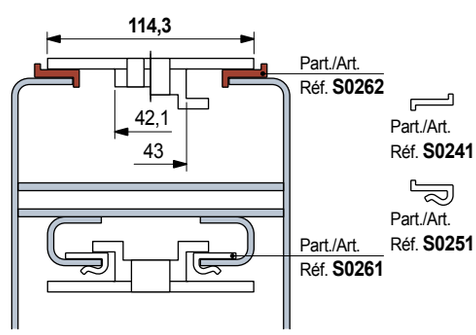

- **Material:** Polyethylene UHMWPE with molecular density 5.600.000 g/mol.
  Characteristics: new material Polyethylene ULF™ brown red (UHMWPE): reduced friction coefficient, higher wear resistance.
- **Linear expansion coefficient:** 2 x 10^{-4} °C^{-1}
  Calculation of thermal expansion see Technical information.
- **Operating temperature Green Black:**
  In air (- 40 to + 80 °C).
  In hot water (+ 70 °C).
- **Operating temperature ULF™ brown red:**
  In air (- 40 to + 45 °C).
  In hot water (+ 45 °C).
- **Polyethylene ULF™ is FDA approved**
  Polyethylene ULF™ complies with the Code of Federal Regulations Title 21, § 177.1520 "Olefin Polymers" of the Food and Drug Administration (FDA) of April 1, 2008.
- **Coefficient of friction between chain POM and wearstrip ULF™:** 0,08.
  Note: for calculation of chain pull refer to Technical Support.
- **Position of guides.** See Technical information.

- **TableTop®** chains series 812 - 815 - 820 - 831 - 881TAB - 8811TAB - 879TAB - 880TAB

Chain width 82,5 mm (K 325) / Pitch 88 mm

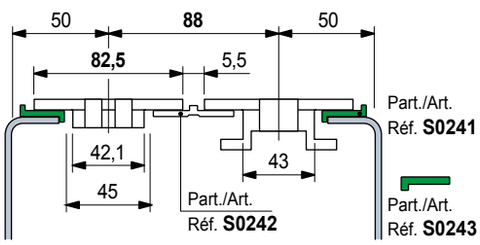

Chain width 82,5 mm (K 325) / Pitch 85 mm

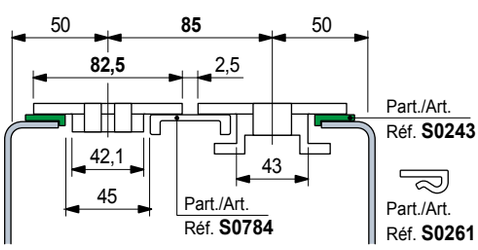

Chain width 114,3 mm (K 450)

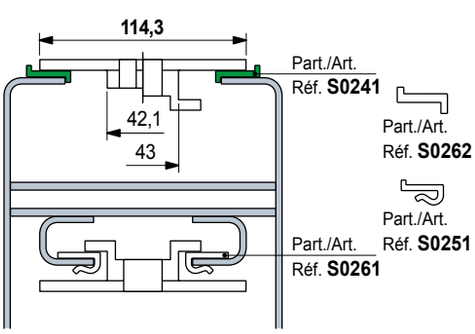

Chain - guide profile

Part. S0241

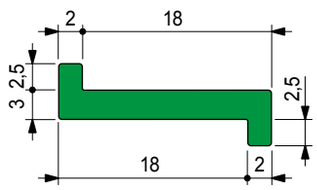

Material UHMWPE	Packaging metres	Code
Green	80	**63641**

- Standard packaging: coil.

Chain - guide profile

Part. S0243

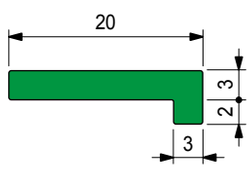

Material UHMWPE	Packaging metres	Code
Green	90	**63701**

- Standard packaging: coil.
- Accessories:

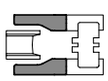

Chain inlet guide shoe side Part. S0551.

Part. S0822

Chain - guide profile

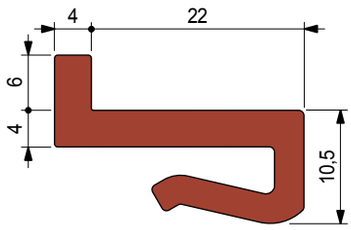

Material UHMWPE	Length metres	Code
ULF™ brown red	6	**UL642623**
Green	3	**632713**

- Applicable to 2,5 to 3,5 mm thick sheet metal.
- Can be used in combination with Part. S0362.
- Packaging: 48 metres.

- **Material:** Polyethylene UHMWPE with molecular density 5.600.000 g/mol.
  Characteristics: new material Polyethylene ULF™ brown red (UHMWPE): reduced friction coefficient, higher wear resistance.
- **Linear expansion coefficient:** 2 x 10^{-4} °C^{-1}
  Calculation of thermal expansion see Technical information.
- **Operating temperature Green Black:**
  In air (- 40 to + 80 °C).
  In hot water (+ 70 °C).
- **Operating temperature ULF™ brown red:**
  In air (- 40 to + 45 °C).
  In hot water (+ 45 °C).
- **Polyethylene ULF™ is FDA approved**
  Polyethylene ULF™ complies with the Code of Federal Regulations Title 21, § 177.1520 "Olefin Polymers" of the Food and Drug Administration (FDA) of April 1, 2008.
- **Coefficient of friction between chain POM and wearstrip ULF™:** 0,08.
  Note: for calculation of chain pull refer to Technical Support.
- **Position of guides.** See Technical information.

Chain width 84 mm Pitch 85 mm

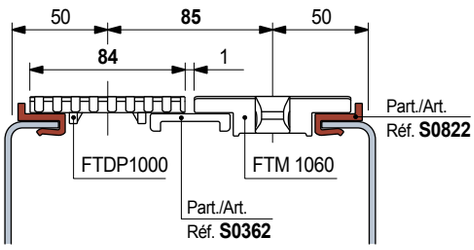

Part. S0825

Chain - guide profile

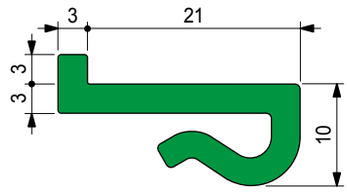

Material UHMWPE	Packaging metres	Code
Green	40	**632033**
ULF		**UL654513U**

- Applicable to 2,5 to 3,5 mm thick sheet metal.
- Can be used in combination with Part. S0784.
- Standard packaging: coil.

Chain width 82,5 mm (K 325) / Pitch 85 mm

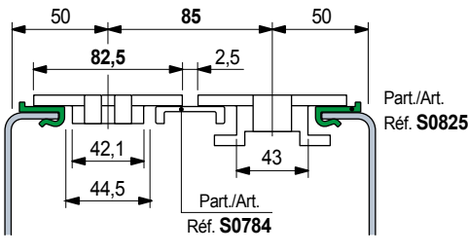

- **Material:** Polyethylene UHMWPE with molecular density 5.600.000 g/mol.
  Characteristics: new material Polyethylene ULF™ brown red (UHMWPE): reduced friction coefficient, higher wear resistance.
- **Linear expansion coefficient:** 2 x 10^{-4} $°C^{-1}$
  Calculation of thermal expansion see Technical information.
- **Operating temperature Green Black:**
  In air (- 40 to + 80 °C).
  In hot water (+ 70 °C).
- **Operating temperature ULF™ brown red:**
  In air (- 40 to + 45 °C).
  In hot water (+ 45 °C).
- **Polyethylene ULF™ is FDA approved**
  Polyethylene ULF™ complies with the Code of Federal Regulations Title 21, § 177.1520 "Olefin Polymers" of the Food and Drug Administration (FDA) of April 1, 2008.
- **Coefficient of friction between chain POM and wearstrip ULF™:** 0,08.
  Note: for calculation of chain pull refer to Technical Support.
- **Position of guides.** See Technical information.

Chain width 82,5 mm (K 325) / Guide clearance 45 mm

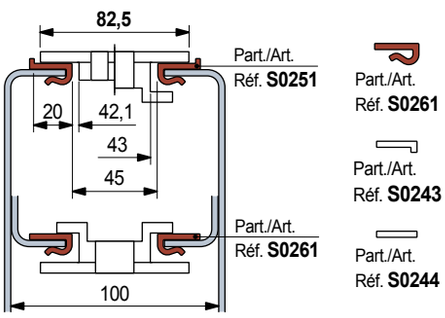

Chain width 82,5 mm (K 325) / Pitch 85 mm

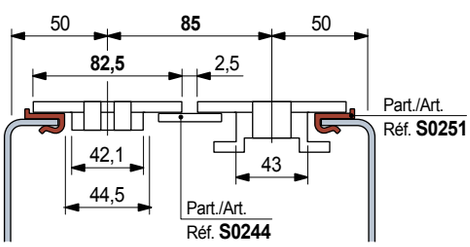

Chain width 114,3 mm (K 450)

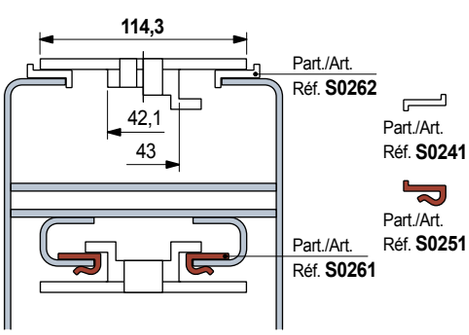

Chain - guide profile

Part. S0251

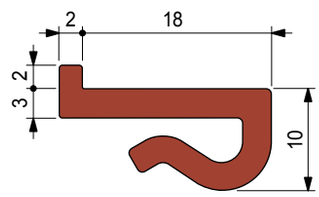

Material UHMWPE	Packaging metres	Code
ULF™ brown red	40	**UL642553**
Green	40	**63631**

- Applicable to 2,5 to 3,5 mm thick sheet metal.
- Standard packaging: coil.

Chain - guide profile

Part. S0261

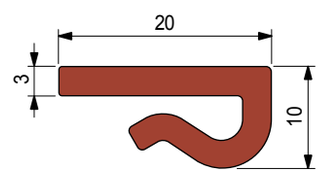

Material UHMWPE	Packaging metres	Code
ULF™ brown red	40	**UL634533N**
Green	40	**65681**

- Applicable to 2,5 to 3,5 mm thick sheet metal.
- Standard packaging: coil.
- Accessories:

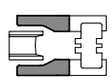

Chain inlet guide
shoe side Part. S0551.

Part. S0840

Chain - guide profile

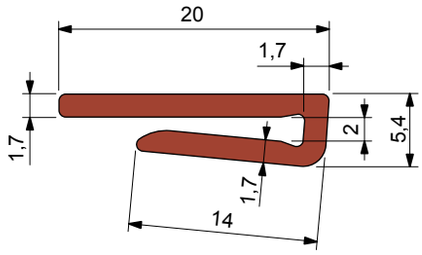

Material UHMWPE	Packaging metres	Code
ULF™ brown red	40	**UL642693**

- Applicable to 2 mm thick sheet metal.
- Standard packaging: coil.

- **Material:** Polyethylene UHMWPE with molecular density 5.600.000 g/mol.
  Characteristics: new material Polyethylene ULF™ brown red (UHMWPE): reduced friction coefficient, higher wear resistance.
- **Linear expansion coefficient:** 2 x 10^{-4} °C^{-1}
  Calculation of thermal expansion see Technical information.
- **Operating temperature Green Black:**
  In air (- 40 to + 80 °C).
  In hot water (+ 70 °C).
- **Operating temperature ULF™ brown red:**
  In air (- 40 to + 45 °C).
  In hot water (+ 45 °C).
- **Polyethylene ULF™ is FDA approved**
  Polyethylene ULF™ complies with the Code of Federal Regulations Title 21, § 177.1520 "Olefin Polymers" of the Food and Drug Administration (FDA) of April 1, 2008.
- **Coefficient of friction between chain POM and wearstrip ULF™:** 0,08.
  Note: for calculation of chain pull refer to Technical Support.
- **Position of guides.** See Technical information.

- ZeroGap™ chains serie 1775

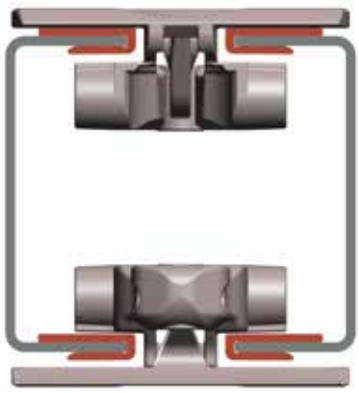

Chain width 82,5 mm (K 325) / Pitch 85 mm

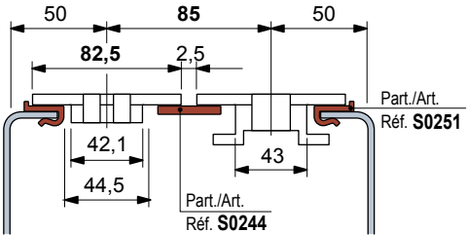

- **Low backline pressure chains** series SLBP 882 TAB - SLBP 821

Chain width 190,5 mm (K 750)

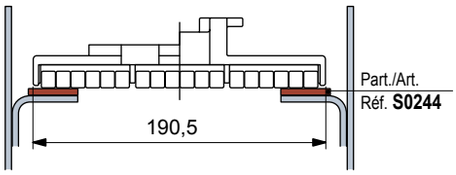

Chain width 95,2 mm (K 375)

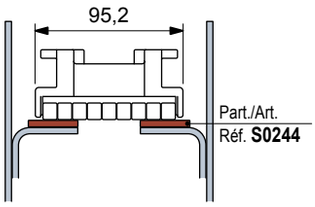

Part. S0244

Chain - guide profile

Material UHMWPE	L x H mm	Packaging metres	Code
Green	40 x 3	60	**63661**

- Standard packaging: coil.
- Accessories:

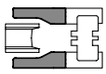

Chain inlet guide shoe side Part. S0551.

- **Material:** Polyethylene UHMWPE with molecular density 5.600.000 g/mol.
  Characteristics: new material Polyethylene ULF™ brown red (UHMWPE): reduced friction coefficient, higher wear resistance.
- **Linear expansion coefficient:** 2 x 10^{-4} °C^{-1}
  Calculation of thermal expansion see Technical information.
- **Operating temperature Green Black:**
  In air (- 40 to + 80 °C).
  In hot water (+ 70 °C).
- **Operating temperature ULF™ brown red:**
  In air (- 40 to + 45 °C).
  In hot water (+ 45 °C).
- **Polyethylene ULF™ is FDA approved**
  Polyethylene ULF™ complies with the Code of Federal Regulations Title 21, § 177.1520 "Olefin Polymers" of the Food and Drug Administration (FDA) of April 1, 2008.
- **Coefficient of friction between chain POM and wearstrip ULF™:** 0,08.
  Note: for calculation of chain pull refer to Technical Support.
- **Position of guides.** See Technical information.

Chain width 82,5 mm (K 325) / Pitch 85 mm

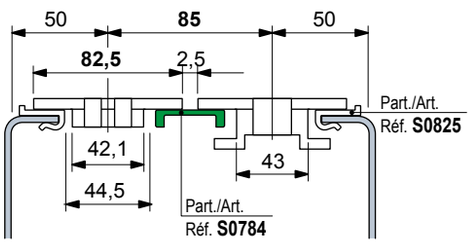

Chain width 82,5 mm (K 325) / Pitch 85 mm

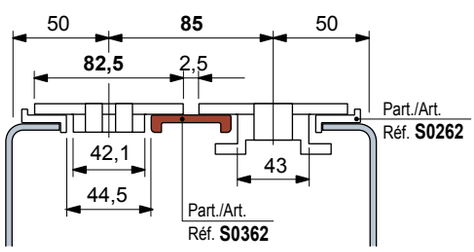

Chain - guide profile

Part. S0784

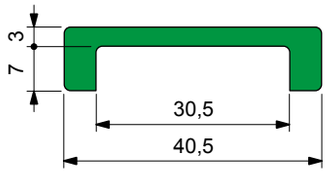

Material UHMWPE	Length metres	Code
Green	3	**620513**

- Packaging: 48 metres.

Chain - guide profile

Part. S0362

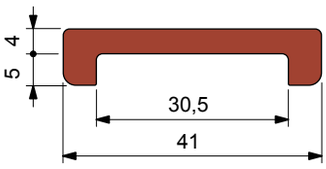

Material UHMWPE	Length metres	Code
ULF™ brown red	3	**UL635293**
Green	6	**67435**

- Packaging: 48 metres.

Part. S0387

Reinforced version

Chain - guide profile

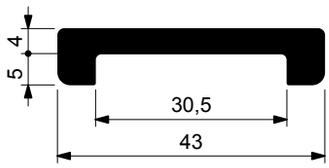

Material UHMWPE	Length metres	Code
Black	3	**694351**

- Can be used in combination with Part. S0386.
- Packaging: 48 metres.

- **Material:** Polyethylene UHMWPE with molecular density 5.600.000 g/mol.
  Characteristics: new material Polyethylene ULF™ brown red (UHMWPE): reduced friction coefficient, higher wear resistance.
- **Linear expansion coefficient:** 2 x 10^{-4} °C^{-1}
  Calculation of thermal expansion see Technical information.
- **Operating temperature Green Black:**
  In air (- 40 to + 80 °C).
  In hot water (+ 70 °C).
- **Operating temperature ULF™ brown red:**
  In air (- 40 to + 45 °C).
  In hot water (+ 45 °C).
- **Polyethylene ULF™ is FDA approved**
  Polyethylene ULF™ complies with the Code of Federal Regulations Title 21, § 177.1520 "Olefin Polymers" of the Food and Drug Administration (FDA) of April 1, 2008.
- **Coefficient of friction between chain POM and wearstrip ULF™:** 0,08.
  Note: for calculation of chain pull refer to Technical Support.
- **Position of guides.** See Technical information.

- **TableTop® chains** series 820 - 880TAB

  Chain width 87 mm (K 343) / Pitch 88 mm

  Multi strand conveyors, with 82,5 mm width chains and pitch 88 mm, can be modified to convey PET bottles with pethal bottom or other unstable products.

  Change chains (from 82,5 mm to 87 mm width) and wear strip, in this way the Gap between chains is reduced (from 5,5 mm to 1 mm) while the conveyor frame is unchanged (pitch 88 mm).

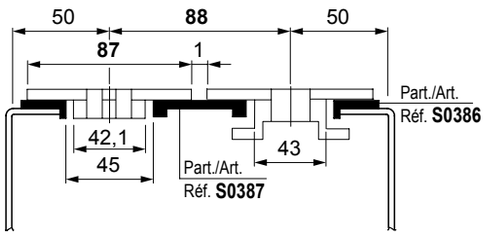

Notes

www.rexnord.com

Please contact our Application Engineers at +31 174 445 111 for assistance with product selection.

38716.Rexnord Catalog Marbett_3 - ENG S001-S042 blauw_v9.indd 9 18-09-18 08:05

Part. S0634

Chain - guide profile

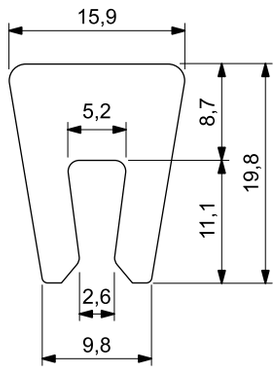

Material UHMWPE	Length metres	Code
White	3	**634073**
	6	**650962**

- Applicable to 4 mm thick sheet metal.
- Packaging: 48 metres.

- **Material:** Polyethylene UHMWPE with molecular density 5.600.000 g/mol.
  Characteristics: new material Polyethylene ULF™ brown red (UHMWPE): reduced friction coefficient, higher wear resistance.
- **Linear expansion coefficient:** 2 x 10^{-4} °C^{-1}
  Calculation of thermal expansion see Technical information.
- **Operating temperature Green Black:**
  In air (- 40 to + 80 °C).
  In hot water (+ 70 °C).
- **Operating temperature ULF™ brown red:**
  In air (- 40 to + 45 °C).
  In hot water (+ 45 °C).
- **Polyethylene ULF™ is FDA approved**
  Polyethylene ULF™ complies with the Code of Federal Regulations Title 21, § 177.1520 "Olefin Polymers" of the Food and Drug Administration (FDA) of April 1, 2008.
- **Coefficient of friction between chain POM and wearstrip ULF™:** 0,08.
  Note: for calculation of chain pull refer to Technical Support.
- **Position of guides.** See Technical information.

- **MatTop® modular chains**

  Parallel wear strips.
  Recommended with mediumlight loads.

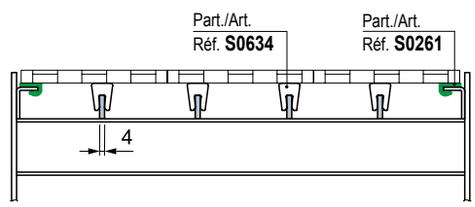

Part. S0814

Chain - guide profile

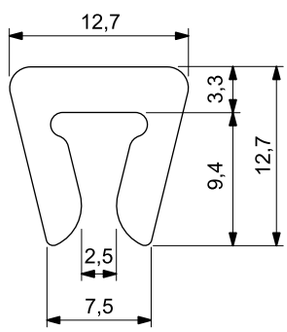

Material UHMWPE	Packaging metres	Code
White	30	**629163**

- Applicable to 3 to 4 mm thick sheet metal.
- Standard packaging: coil.

- **MatTop® modular chains**

  Parallel wear strips.
  Recommended with mediumlight loads.

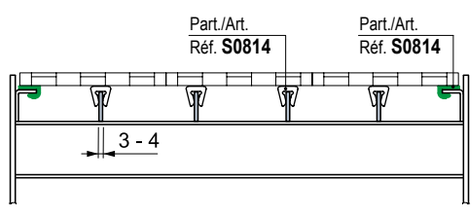

REXNORD

- **Material:** Polyethylene UHMWPE with molecular density 5.600.000 g/mol.
  Characteristics: new material Polyethylene ULF™ brown red (UHMWPE): reduced friction coefficient, higher wear resistance.
- **Linear expansion coefficient:** 2 x 10^{-4} $°C^{-1}$
  Calculation of thermal expansion see Technical information.
- **Operating temperature Green Black:**
  In air (- 40 to + 80 °C).
  In hot water (+ 70 °C).
- **Operating temperature ULF™ brown red:**
  In air (- 40 to + 45 °C).
  In hot water (+ 45 °C).
- **Polyethylene ULF™ is FDA approved**
  Polyethylene ULF™ complies with the Code of Federal Regulations Title 21, § 177.1520 "Olefin Polymers" of the Food and Drug Administration (FDA) of April 1, 2008.
- **Coefficient of friction between chain POM and wearstrip ULF™:** 0,08.
  Note: for calculation of chain pull refer to Technical Support.
- **Position of guides.** See Technical information.

- **Use of** part. S0742
  Ideal with TableTop® chains width 114,3 mm (K450).

  Chain width 114,3 mm (K 450).

- **Use of** part. S0674
  Ideal as intermediate support for wide chains.

  TableTop® chains series 820 width 190,5 (K750).

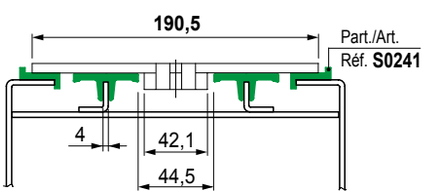

TableTop® double hinge chains series 821 width 304,8 (K1200).

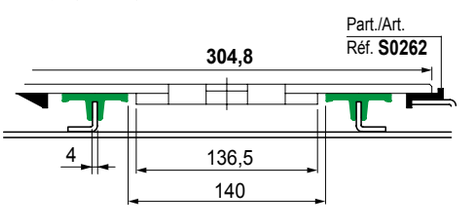

Chain - guide profile

Part. S0674

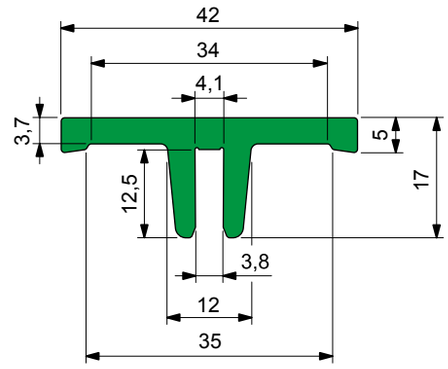

Material UHMWPE	Length metres	Code
Green	3	**675792**

- Applicable to 4 mm thick sheet metal.
- Packaging: 24 metres.

Part. S0422

Chain - guide profile

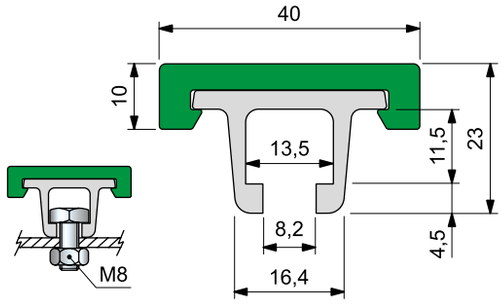

Assembly with M8 hexagon bolt

Metal profile material	Length metres	Code	Weight kg/m
Anodized aluminium	3	**65248M**	0,70
	6	**65258M**	

- Colour: green.
- Standard packaging: the plastic and metal profiles are supplied assembled.
- Packaging: 24 metres.

- **Material:** Polyethylene UHMWPE with molecular density 5.600.000 g/mol.
  Characteristics: new material Polyethylene ULF™ brown red (UHMWPE): reduced friction coefficient, higher wear resistance.
- **Linear expansion coefficient:** 2 x 10^{-4} °C^{-1}
  Calculation of thermal expansion see Technical information.
- **Operating temperature Green Black:**
  In air (- 40 to + 80 °C).
  In hot water (+ 70 °C).
- **Operating temperature ULF™ brown red:**
  In air (- 40 to + 45 °C).
  In hot water (+ 45 °C).
- **Polyethylene ULF™ is FDA approved**
  Polyethylene ULF™ complies with the Code of Federal Regulations Title 21, § 177.1520 "Olefin Polymers" of the Food and Drug Administration (FDA) of April 1, 2008.
- **Coefficient of friction between chain POM and wearstrip ULF™:** 0,08.
  Note: for calculation of chain pull refer to Technical Support.
- **Position of guides.** See Technical information.

- **Deflection**

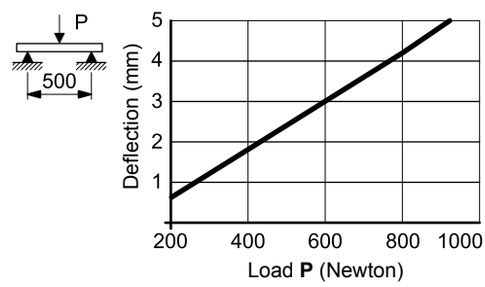

Part. S0369

Connecting bar

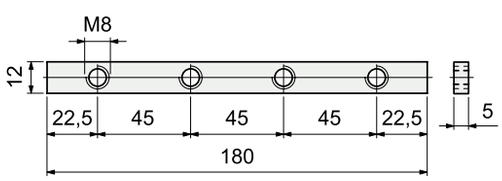

Material	Code	Weight kg
Zinc plated steel	**69995**	0,10

- Packaging: 8 pieces.

- **TableTop® chains** series 812 - 815 - 820 - 831 - 881TAB - 8811TAB - 879TAB - 880TAB

Chain width 82,5 mm (K 325) / Pitch 85 mm

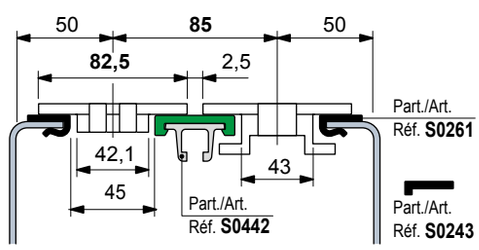

Chain width 82,5 mm (K 325) / Pitch 83,5 mm

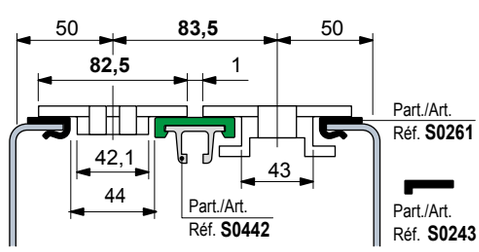

- **Assembly of** Part. S0369
  Insert the guides and tighten the set screws.

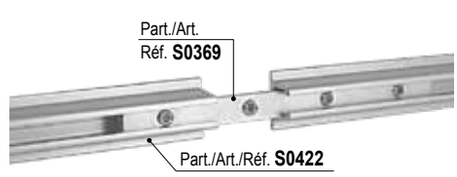

- **Material:** Polyethylene UHMWPE with molecular density 5.600.000 g/mol.
  Characteristics: new material Polyethylene ULF™ brown red (UHMWPE): reduced friction coefficient, higher wear resistance.
- **Linear expansion coefficient:** 2 x 10^{-4} $°C^{-1}$
  Calculation of thermal expansion see Technical information.
- **Operating temperature Green Black:**
  In air (- 40 to + 80 °C).
  In hot water (+ 70 °C).
- **Operating temperature ULF™ brown red:**
  In air (- 40 to + 45 °C).
  In hot water (+ 45 °C).
- **Polyethylene ULF™ is FDA approved**
  Polyethylene ULF™ complies with the Code of Federal Regulations Title 21, § 177.1520 "Olefin Polymers" of the Food and Drug Administration (FDA) of April 1, 2008.
- **Coefficient of friction between chain POM and wearstrip ULF™:** 0,08.
  Note: for calculation of chain pull refer to Technical Support.
- **Position of guides.** See Technical information.

Chain - guide profile

Part. S0885

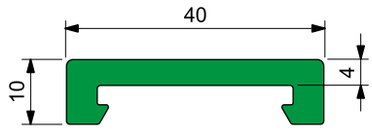

Material UHMWPE	Length metres	Code
Green	6	**68309**

- Can be used in combination with Part. S0884 - S0368.
- Packaging: 48 metres.

Part. S0366

Chain - guide profile

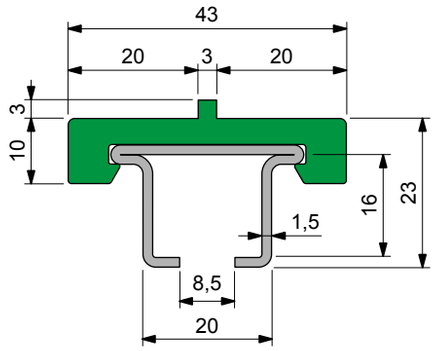

Metal profile material	Length metres	Code	Weight kg/m
Austenitic stainless steel	3	**64056M**	1,10

- Colour: green.
- Standard packaging: the plastic and metal profiles are supplied assembled.
- Packaging: 12 metres.

Part. S0367

Chain - guide profile

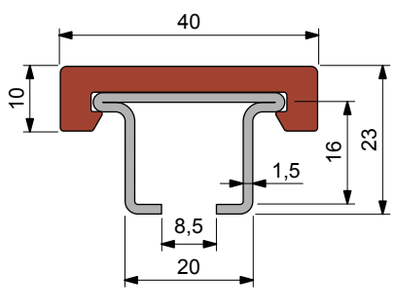

Metal profile material	Material UHMWPE	Length metres	Code	Weight kg/m
Austenitic stainless steel	Green	3	**64046M**	1,10
		6	**69615M**	
Ferritic stainless steel	Green	3	**693272M**	
		6	**693282M**	

- Standard packaging: the plastic and metal profiles are supplied assembled.
- Packaging: 6 metres.
- Packaging: 3 metres.

- **Material:** Polyethylene UHMWPE with molecular density 5.600.000 g/mol.
  Characteristics: new material Polyethylene ULF™ brown red (UHMWPE): reduced friction coefficient, higher wear resistance.
- **Linear expansion coefficient:** 2 x 10^{-4} °C^{-1}
  Calculation of thermal expansion see Technical information.
- **Operating temperature Green Black:**
  In air (- 40 to + 80 °C).
  In hot water (+ 70 °C).
- **Operating temperature ULF™ brown red:**
  In air (- 40 to + 45 °C).
  In hot water (+ 45 °C).
- **Polyethylene ULF™ is FDA approved**
  Polyethylene ULF™ complies with the Code of Federal Regulations Title 21, § 177.1520 "Olefin Polymers" of the Food and Drug Administration (FDA) of April 1, 2008.
- **Coefficient of friction between chain POM and wearstrip ULF™:** 0,08.
  Note: for calculation of chain pull refer to Technical Support.
- **Position of guides.** See Technical information.

- **Deflection of** Part. S0366 - S0367 - S0368

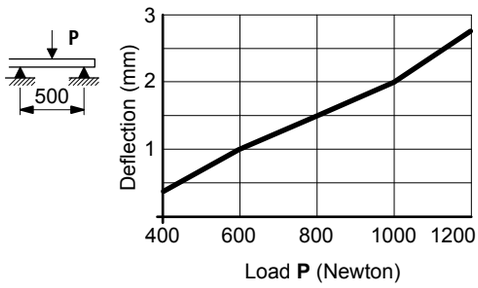

- **TableTop® chains** series 812 - 815 - 820 - 831 - 881TAB - 8811TAB - 879TAB - 880TAB

Chain width 82,5 mm (K 325) / Pitch 88 mm

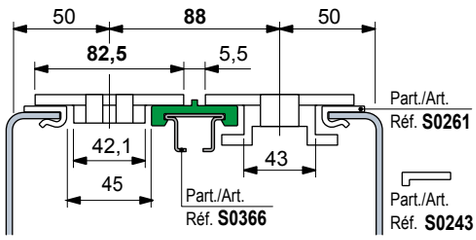

Chain width 82,5 mm (K 325) / Pitch 85 mm

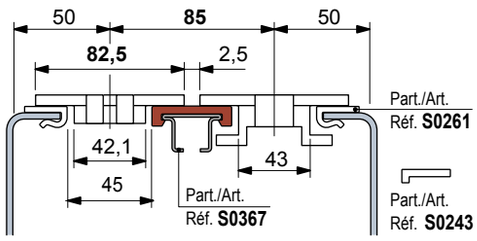

Chain width 82,5 mm (K 325) / Pitch 83,5 mm

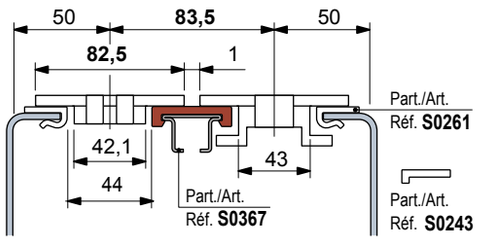

- **Material:** Polyethylene UHMWPE with molecular density 5.600.000 g/mol.
  Characteristics: new material Polyethylene ULF™ brown red (UHMWPE): reduced friction coefficient, higher wear resistance.
- **Linear expansion coefficient:** 2 x 10^{-4} $°C^{-1}$
  Calculation of thermal expansion see Technical information.
- **Operating temperature Green Black:**
  In air (- 40 to + 80 °C).
  In hot water (+ 70 °C).
- **Operating temperature ULF™ brown red:**
  In air (- 40 to + 45 °C).
  In hot water (+ 45 °C).
- **Polyethylene ULF™ is FDA approved**
  Polyethylene ULF™ complies with the Code of Federal Regulations Title 21, § 177.1520 "Olefin Polymers" of the Food and Drug Administration (FDA) of April 1, 2008.
- **Coefficient of friction between chain POM and wearstrip ULF™:** 0,08.
  Note: for calculation of chain pull refer to Technical Support.
- **Position of guides.** See Technical information.

Chain - guide profile

Part. S0368

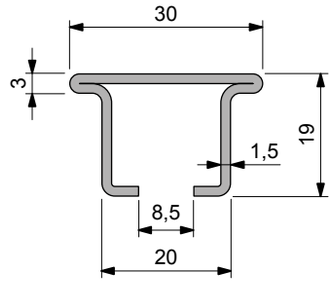

Metal profile material	Length metres	Code	Weight kg/m
Austenitic stainless steel	3	**64066**	0,90
	6	**69645**	
Ferritic stainless steel	3	**693292**	
	6	**693302**	

- Use: recommended with MatTop® chains in abrasive environment / high speed / high temperature.
- Packaging: 18 metres (in 6 m length)
- Packaging: 12 metres (in 3 m length)

Chain - guide profile

Part. S0885

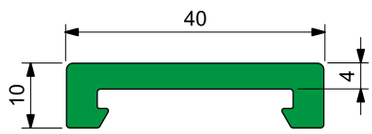

Material UHMWPE	Length metres	Code
Green	6	**68309**

- Can be used in combination with Part. S0368 - S0884.
- Packaging: 48 metres.

Part. S0858

Hinge Joint

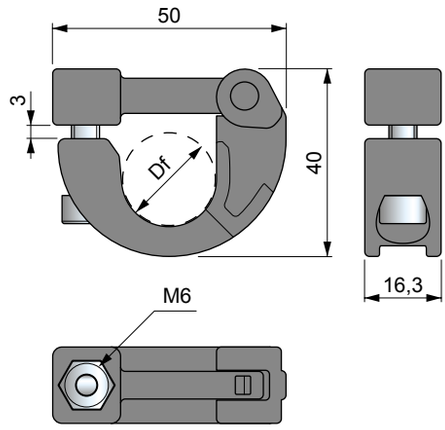

Bore dia. mm	Code	Weight kg
ø 20	**645493**	0,03

- Use: easy assembly of wear strips on tubes rods dia. 20 mm.
- Material: clamp in reinforced polyamide PA FV (black).
  Bolts and nuts in austenitic stainless steel.
- Packaging: 50 pieces.

• **Use of** Part S0858
Assembly the chain guide profiles Part. S0366 - S0367 - S0368 on rods dia. 20 mm.

No more drilling holes to assemble the profile, possibility to easily adjust the position of the guide, standardization of the 20 mm rod already used for the chain return section (with rollers).

Chain width 114,3 mm (K 450) / Pitch 120 mm

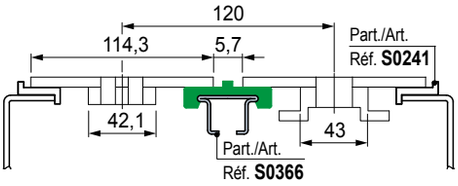

Chain width 152,4 mm (K 600) / Pitch 158 mm

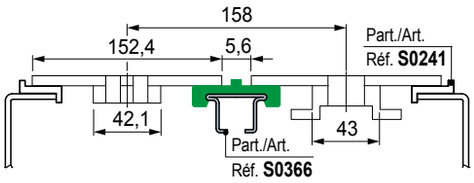

- **MatTop® modular chains**
  Parallel wear strips.
  Recommended with medium light loads.

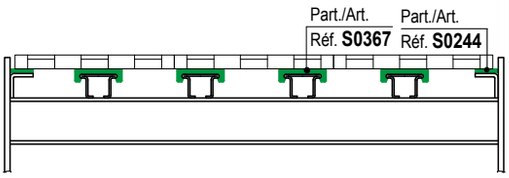

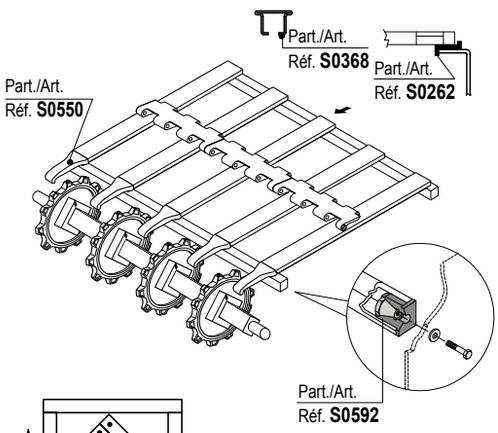

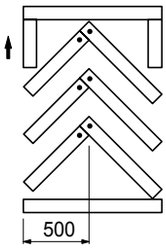

CHEVRON pattern.
Recommended with high loads (accumulation tables).
Chain wear is evenly distributed throughout the width.

Mounting block

Part. S0371

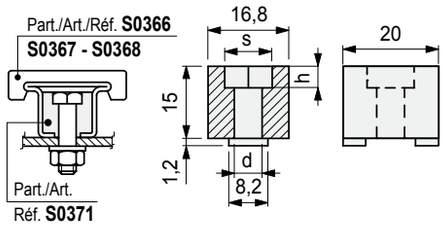

d mm	h mm	Hexagon s mm	Code
6,2 (for screws M6)	4,5	10,2	**64026**
8,1 (for screws M8)	6	13,2	**61056**

- Use: easy assembly of wear strips on frame.
  Assembly with M6 or M8 hexagon bolt.
- Material: reinforced polyamide PA FV (black).
- Packaging: 50 pieces.

Part. S0550

Chain inlet guide shoe (centre)

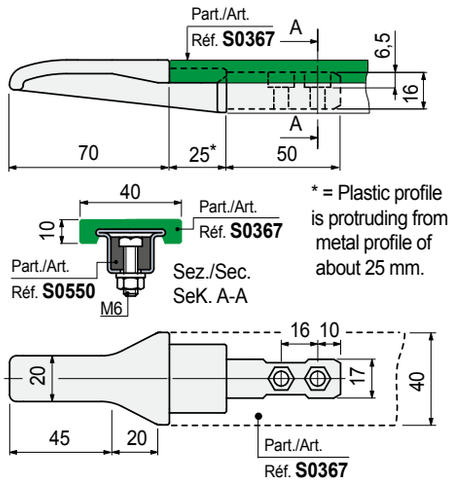

* = Plastic profile is protruding from metal profile of about 25 mm.

Code	Weight kg
689491	0,042

- Use: can be used in combination with Part. S0367.
- Material: polyamide PA (black).
- Packaging: 50 pieces.

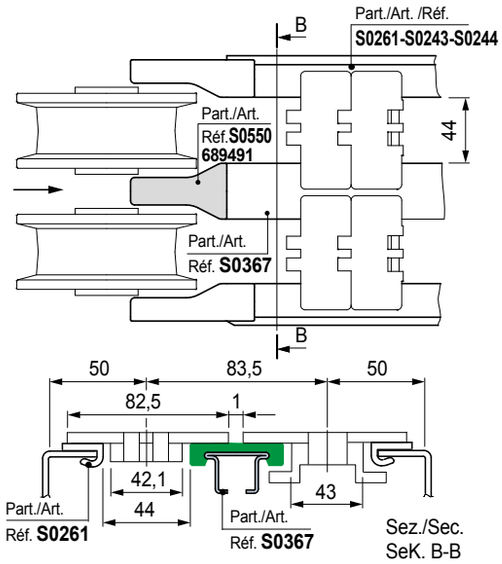

• Example of use of Part. 550 in a MatTop® conveyor.

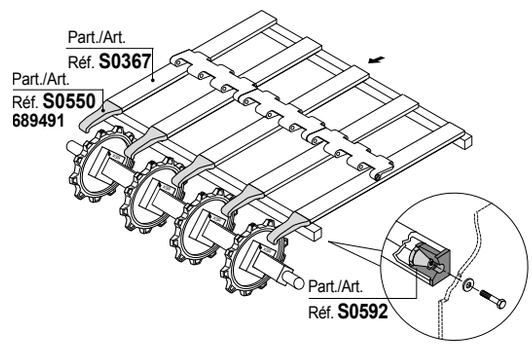

• **Positioning**

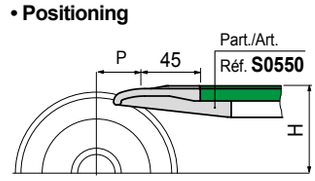

P = Chain pitch
H = See page S40.

Notes

www.rexnord.com

Please contact our Application Engineers at +31 174 445 111 for assistance with product selection.

38716.Rexnord Catalog Marbett_3 - ENG S001-S042 blauw_v9.indd 19 18-09-18 08:05

Part. S0768

Chain - guide profile

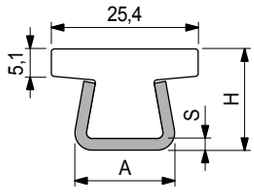

S mm	H mm	A mm
1,5	17	16
2	17,5	17

Thickness S mm	Metal profile material	Length metres	Code	Weight kg/m
1,5	Austenitic stainless steel	3	**609083N**	0,63
2	Austenitic stainless steel	3	**609113N**	0,74

- Colour: white.
- Min. curvature radius: 160 mm.
- Linear expansion coefficient: 4 x 10^{-5} °C^{-1}.
- Calculation of thermal expansion see Technical information.
- Packaging: 24 metres.

Part. S0767

Chain - guide profile

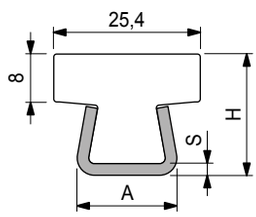

S mm	H mm	A mm
1,5	20,5	16
2	21	17

Thickness S mm	Metal profile material	Length metres	Code	Weight kg/m
2	Austenitic stainless steel	3	**609063N**	0,82

- Colour: white.
- Min. curvature radius: 160 mm.
- Linear expansion coefficient: 4 x 10^{-5} °C^{-1}.
- Calculation of thermal expansion see Technical information.
- Packaging: 24 metres.

- **Material:** Polyethylene UHMWPE with molecular density 5.600.000 g/mol.
  Characteristics: new material Polyethylene ULF™ brown red (UHMWPE): reduced friction coefficient, higher wear resistance.
- **Operating temperature White:**
  In air (- 40 to + 80 °C).
  In hot water (+ 70 °C).
- **Operating temperature ULF™ brown red:**
  In air (- 40 to + 45 °C).
  In hot water (+ 45 °C).
- **Polyethylene ULF™ is FDA approved**
  Polyethylene ULF™ complies with the Code of Federal Regulations Title 21, § 177.1520 "Olefin Polymers" of the Food and Drug Administration (FDA) of April 1, 2008.
- **Coefficient of friction between chain POM and wearstrip ULF™:** 0,08.
  Note: for calculation of chain pull refer to Technical Support.
- **Position of guides.** See Technical information.

- **Deflection of** Part. S0223 - S0310 - S0356

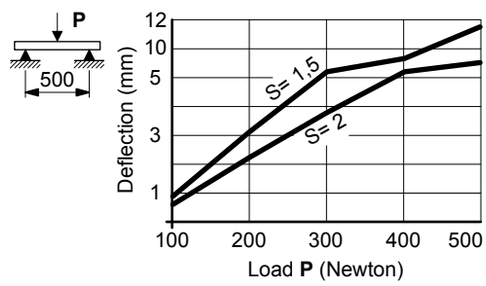

- **TableTop® chains** series 812 - 815 - 820 - 831 - 881TAB - 8811TAB - 879TAB - 880TAB

Chain width 82,5 mm (K 325) / Pitch 88 mm

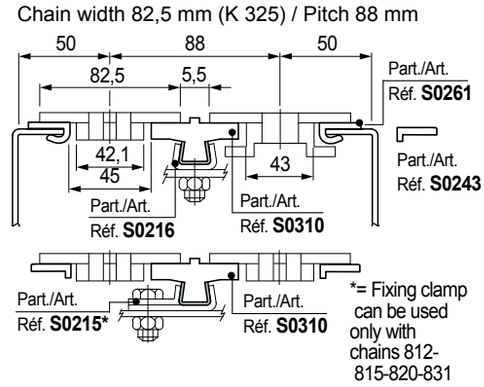

Chain width 82,5 mm (K 325) / Pitch 85 mm

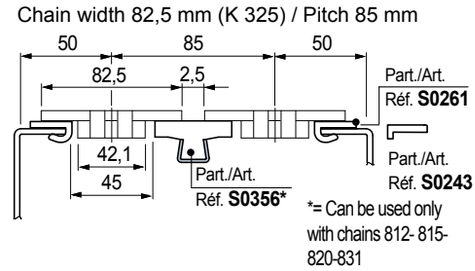

Chain width 82,5 mm (K 325) / Pitch 83,5 mm

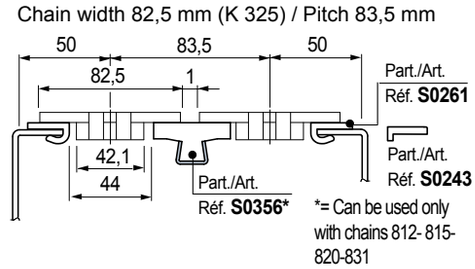

- **Material:** Polyethylene UHMWPE with molecular density 5.600.000 g/mol.
  Characteristics: new material Polyethylene ULF™ brown red (UHMWPE): reduced friction coefficient, higher wear resistance.
- **Operating temperature White:**
  In air (- 40 to + 80 °C).
  In hot water (+ 70 °C).
- **Operating temperature ULF™ brown red:**
  In air (- 40 to + 45 °C).
  In hot water (+ 45 °C).
- **Polyethylene ULF™ is FDA approved**
  Polyethylene ULF™ complies with the Code of Federal Regulations Title 21, § 177.1520 "Olefin Polymers" of the Food and Drug Administration (FDA) of April 1, 2008.
- **Coefficient of friction between chain POM and wearstrip ULF™:** 0,08.
  Note: for calculation of chain pull refer to Technical Support.
- **Position of guides.** See Technical information.

- **Head joint**
  Head joint shall be made with a 45° cut to avoid steps and guarantee chain smooth mouvement. With temperature encrease it is necessary to leave a gap wide enough to allow for thermal elongation of plastic parts.

- **MatTop® modular chain**

  Parallel wear strip.
  Recommended with medium-light loads.

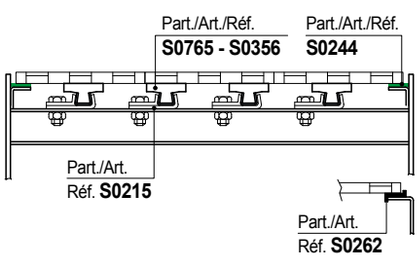

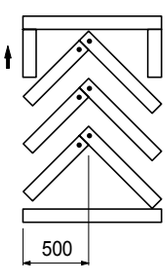

CHEVRON pattern.
Recommended with high loads (accumulation tables)
Chain wear is evenly distributed throughout the width.

Chain - guide profile

Part. S0356

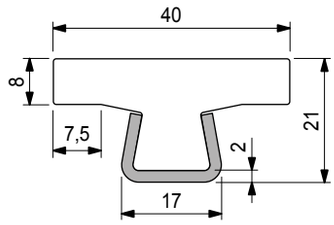

Colour	Length metres	Code	Weight kg/m
White	3	**61605**	0,89
	6	**61615**	

- Material: metal profile austenitic stainless steel.
- Linear expansion coefficient: 4 x 10^{-5} °C^{-1}.
- Calculation of thermal expansion see Technical information.
- Packaging: 24 metres.

Chain - guide profile

Part. S0765

S mm	H mm	A mm
1,5	20,5	16
2	21	17

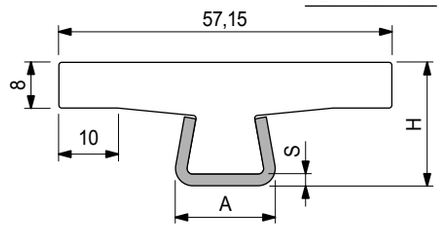

Thickness S mm	Metal profile material	Length metres	Code	Weight kg/m
1,5	Austenitic stainless steel	3	**608943N**	0,95
2	Austenitic stainless steel	6	**608983N**	1,06

- Colour: white.
- Min. curvature radius: 200 mm.
- Linear expansion coefficient: 4 x 10^{-5} °C^{-1}.
- Calculation of thermal expansion see Technical information.
- Packaging: 24 metres.

Part. S0766

Chain - guide profile

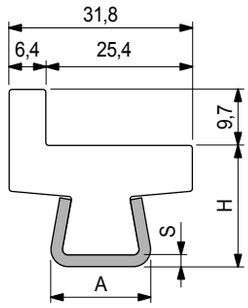

S mm	H mm	A mm
1,5	20,5	16
2	21	17

Thickness S mm	Metal profile material	Length metres	Code	Weight kg/m
2	Austenitic stainless steel	3	**609013N**	0,93

- Colour: white.
- Linear expansion coefficient: 4 x 10^{-5} °C^{-1}.
- Calculation of thermal expansion see Technical information.
- Packaging: 24 metres.

- **Material:** Polyethylene UHMWPE with molecular density 5.600.000 g/mol.
  Characteristics: new material Polyethylene ULF™ brown red (UHMWPE): reduced friction coefficient, higher wear resistance.
- **Operating temperature White:**
  In air (- 40 to + 80 °C).
  In hot water (+ 70 °C).
- **Operating temperature ULF™ brown red:**
  In air (- 40 to + 45 °C).
  In hot water (+ 45 °C).
- **Polyethylene ULF™ is FDA approved**
  Polyethylene ULF™ complies with the Code of Federal Regulations Title 21, § 177.1520 "Olefin Polymers" of the Food and Drug Administration (FDA) of April 1, 2008.
- **Coefficient of friction between chain POM and wearstrip ULF™:** 0,08.
  Note: for calculation of chain pull refer to Technical Support.
- **Position of guides.** See Technical information.

- **Head joint**
  Head joint shall be made with a 45° cut to avoid steps and guarantee chain smooth mouvement. With temperature encrease it is necessary to leave a gap wide enough to allow for thermal elongation of plastic parts.

- **MatTop® modular chain**

  Parallel wear strip.
  Recommended with medium-light loads.

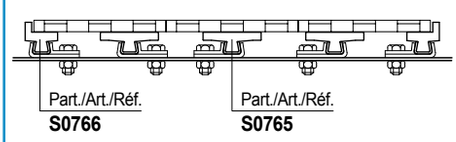

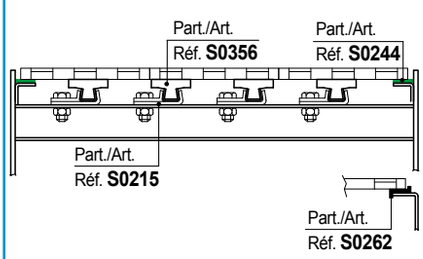

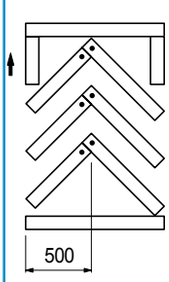

CHEVRON pattern.
Recommended with high loads (accumulation tables)
Chain wear is evenly distributed throughout the width.

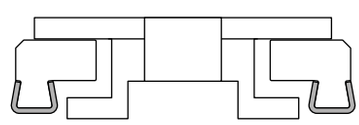

REXNORD

- **Material:** Polyethylene UHMWPE with molecular density 5.600.000 g/mol.
  Characteristics: new material Polyethylene ULF™ brown red (UHMWPE): reduced friction coefficient, higher wear resistance.
- **Operating temperature White:**
  In air (- 40 to + 80 °C).
  In hot water (+ 70 °C).
- **Operating temperature ULF™ brown red:**
  In air (- 40 to + 45 °C).
  In hot water (+ 45 °C).
- **Polyethylene ULF™ is FDA approved**
  Polyethylene ULF™ complies with the Code of Federal Regulations Title 21, § 177.1520 "Olefin Polymers" of the Food and Drug Administration (FDA) of April 1, 2008.
- **Coefficient of friction between chain POM and wearstrip ULF™:** 0,08.
  Note: for calculation of chain pull refer to Technical Support.
- **Position of guides.** See Technical information.

- **Use of** Part. S0223

  ANSI 60 American series roller chain (pitch 19,05 mm, roller Dia. 11,91 mm, internal width 12,7 mm).

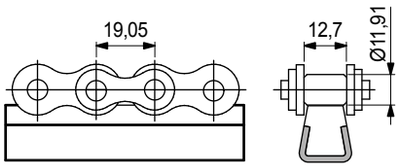

- **PlateTop chain** series 1874 - 4874 - 1873

  Chain width 82,5 mm (K325), 114,3 mm (K450), 152,4 mm (K600)

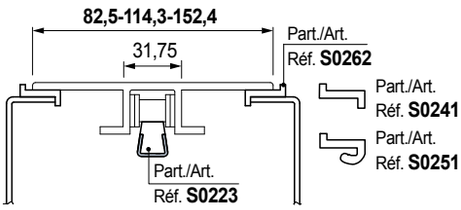

Chain width 254 mm (K1000), 304,8 mm (K1200)

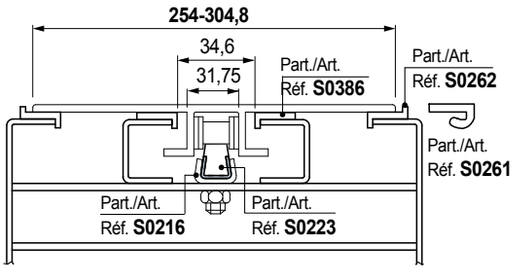

Chain - guide profile

Part. S0223

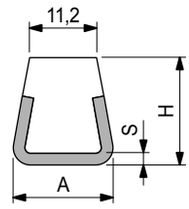

S mm	H mm	A mm
1,5	17,5	16
2	18	17

Thickness S mm	Metal profile material	Length metres	Code	Weight kg/m
1,5	Austenitic stainless steel	3	**61031**	0,54
	Zinc plated steel	3	**63971**	

- Colour: white.
- Linear expansion coefficient: 4 x 10^{-5} °C^{-1}.
- Calculation of thermal expansion see Technical information.
- Packaging: 24 metres

Part. S0903

ViseClamp™

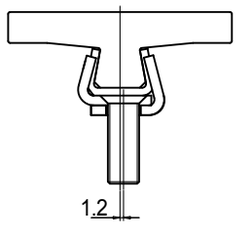

Use	Code
For guides width S = 2	**656001N**

- Material: austenitic stainless steel.
- Packaging: 50 pieces.

• **Assembly of** Part. S0903

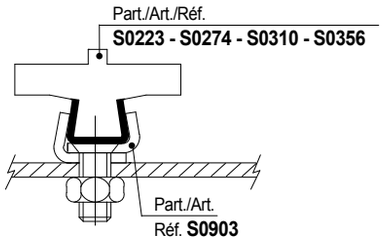

Part. S0902

ViseSplice™

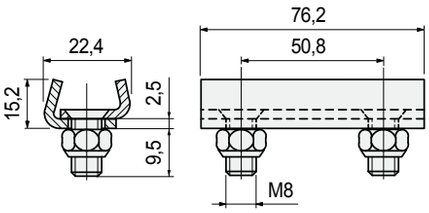

Use	Code
For guides width S = 2	**656041N**

- Material: austenitic stainless steel.
- Self-locking nut.
- Packaging: 50 pieces.

• **Assembly of** Part. S0902

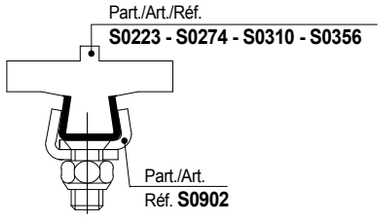

Part. S0215

• **Assembly of** Part. S0215

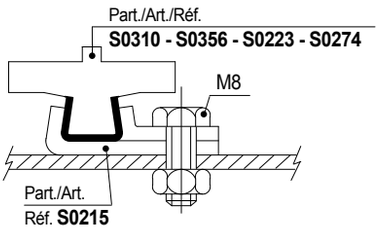

Clamp

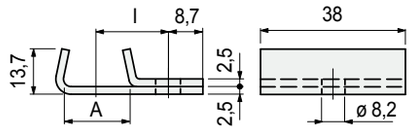

Use	A mm	l mm	Code
For guides width S = 1,5	16	20,5	**60121N**
For guides width S = 2	17	20	**65976N**

- Use: easy assembly of guide profiles Part. S0310 - S0356 - S0223 - S0274.
- Material: austenitic stainless steel.
- Packaging: 50 pieces.

Part. S0275

• **Assembly of** Part. S0275

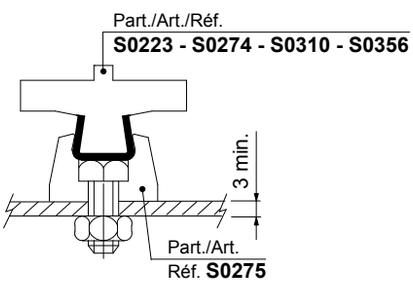

Clamp

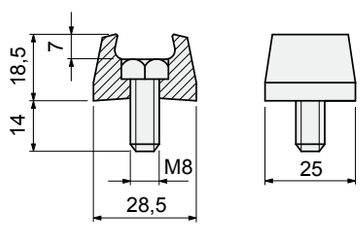

Use	Code
For Part. S0223 (width S = 1,5 e 2) S0274 - S0310 - S0356	**66811**

- Use: easy assembly of guide profiles Part. S0310 - S0356 - S0223 - S0274.
- Material: body in acetal resin POM (black), bolt in austenitic stainless steel.
- Packaging: 50 pieces.

Notes

REXNORD

Part. S0153

Wear shoe

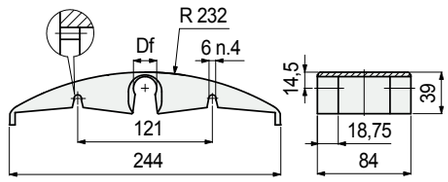

Snap-on assembly

Shaft dia. mm	Bore dia. Df mm	Materiale	Code
18	18,5	Polyethylene PE (green)	**608692N1**
20	20,5	Polyethylene PE (green)	**684231N1**

- New UNL™ low noise material is recommended only with LBP chains.
- PE polyethylene (green) version is recommended with plastic chains and metal chains.
- PA polyamide (black) version is recommended only with metal chains.
- The use of only one wear shoe after the catenary is recommended, with the exception of LBP chains that can run on more wear shoes.
- Packaging: 15 pieces.

• Positioning

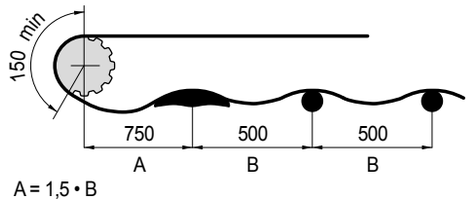

• Assembly

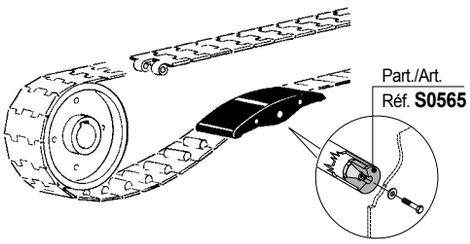

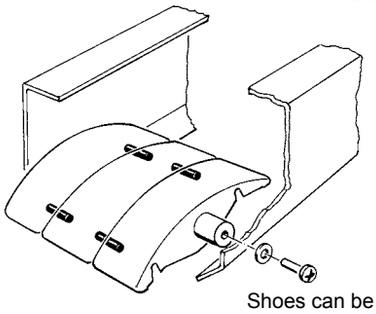

Shoes can be pinned together

• TableTop® chains / PlateTop chains

Chain width 82,5 mm (K 325)

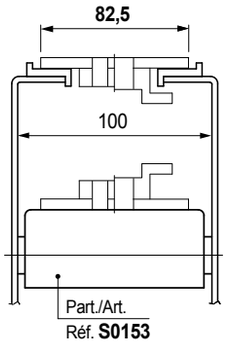

Chain width 82,5mm (K 325) / Pitch 88mm

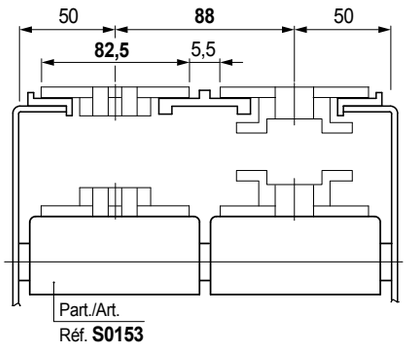

Chain width 82,5mm (K 325) / Pitch 85mm

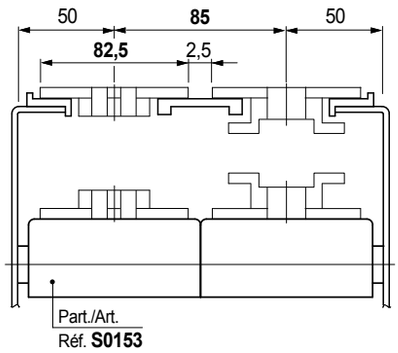

Part. S0073

Dia. 42,5 mm

Roller

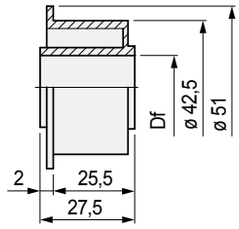

Shaft dia. mm	Bore dia. Df mm	Code
20	20,5	**50680**

- Material: polyethylene PE (black).
- Packaging: 48 metres.

Part. S0126

Separator

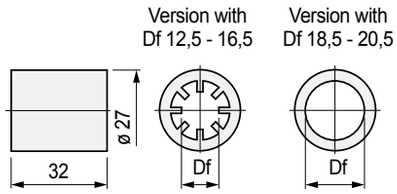

Shaft dia. mm	Bore dia. Df mm	Code
20	20,5	**62520**

- Material: polyethylene PE (black).
- Packaging: 48 metres.

• **TableTop® chains/PlateTop chains**

Chain width 82,5 mm (K 325)

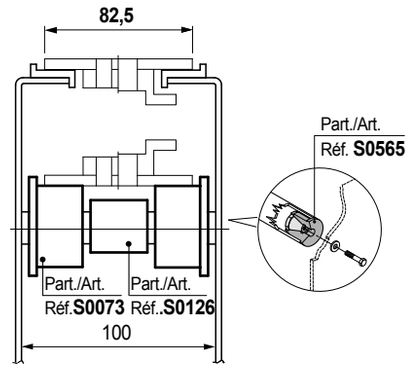

Chain width 114,3 mm (K 450)

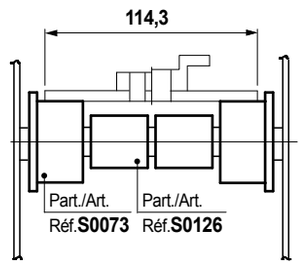

Chain width 82,5 mm (K 325) / Pitch 88 mm

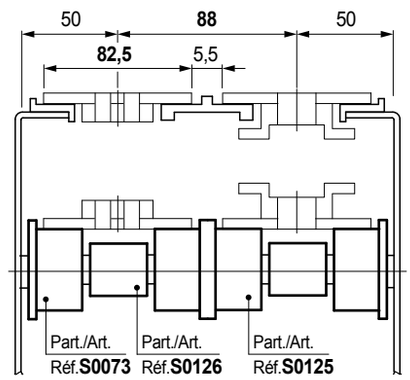

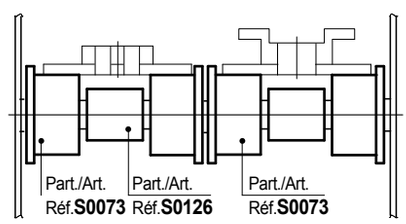

Chain width 114,3 mm (K 450) / Pitch 120 mm

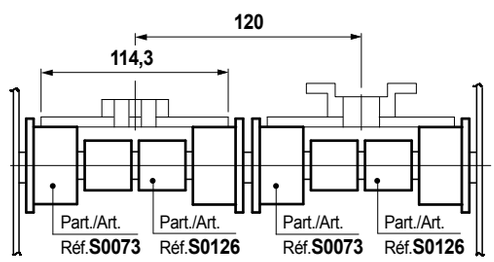

Chain width 82,5 mm (K 325) / Pitch 85 mm

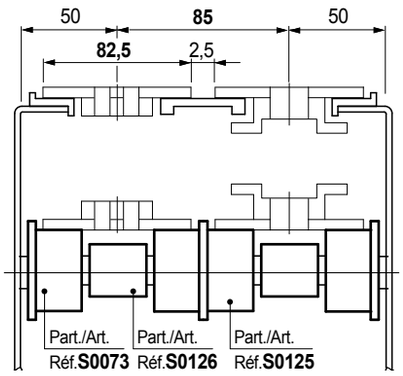

Chain width 82,5 mm (K 325) / Pitch 83,5 mm

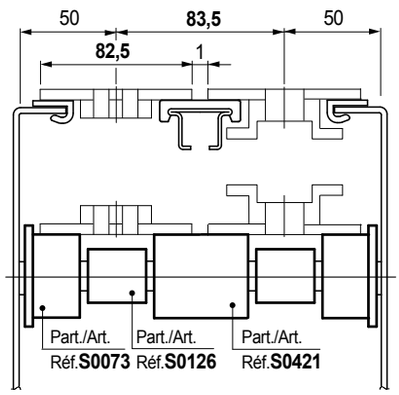

Chain width 87 mm (K 343) / Pitch 88 mm

Roller

Part. S0421

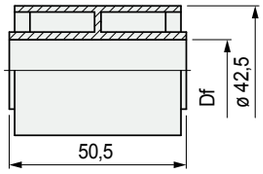

Dia. 42,5 mm

Shaft dia. mm	Bore dia. Df mm	Code
20	20,5	**63888**

- Material: polyethylene PE (black).
- Packaging: 48 metres.

Part. S0782

Dia. 50 mm

Double roller

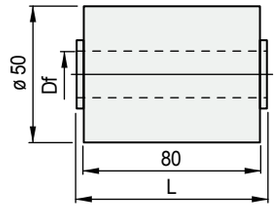

shaft dia. mm	shaft dia. inch	Bore dia. Df mm	Code L = 82	Code L = 84,5
Version PE (Black)				
20	**3/4**	20,5	**620613**	**620633**

- Characteristics: completely closed design.
- Version in UNL™ low noise material.
- Colour: UNL™ (aubergine), polyethylene PE (black).
- Packaging: 48 pieces.

Part. S0787

For Part. S0782

Guide flange

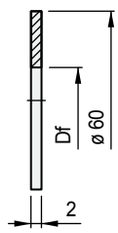

Material	shaft dia. mm	shaft dia. inch	Bore dia. Df mm	Code
Polyethylene PE (black)	**20**	**3/4**	20,2	**620673**

- Assembly: to be applied to roller Part. S0782.
- Packaging: 100 pieces.

Chain width 82,5 mm (K325)

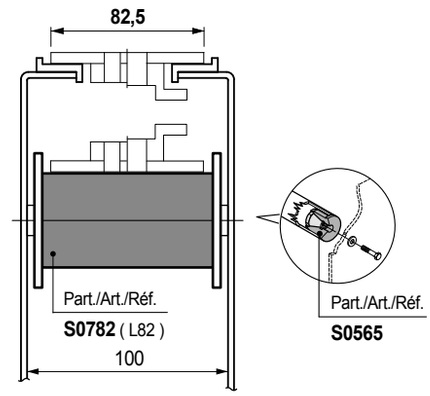

Chain width 82,5 mm (K325) / Pitch 85 mm

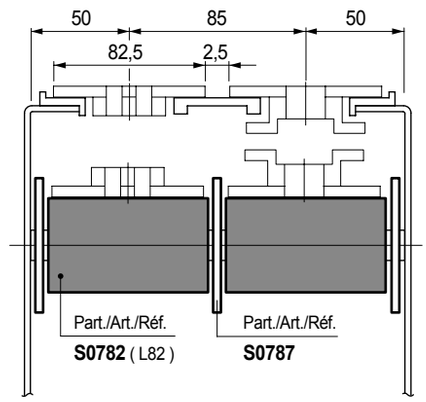

Chain width 84 mm pitch 85 mm

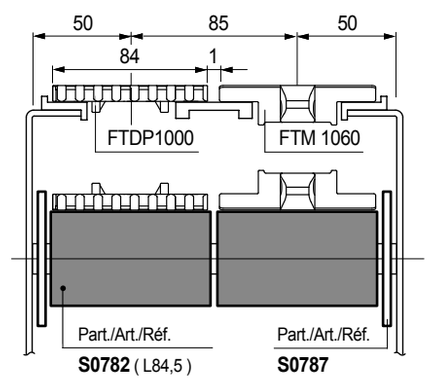

MatTop® modular chains

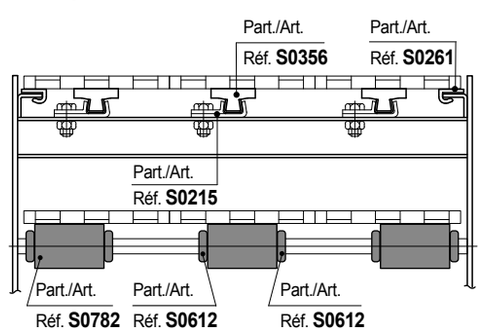

Chain width 82,5 mm (K325)

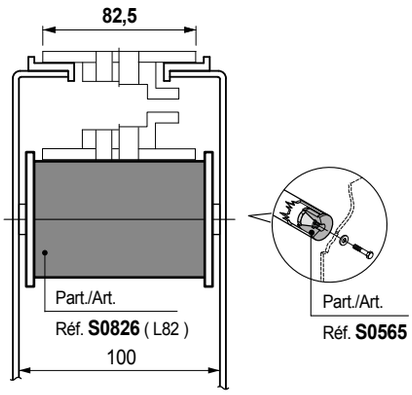

Chain width 82,5 mm (K325) / Pitch 85 mm

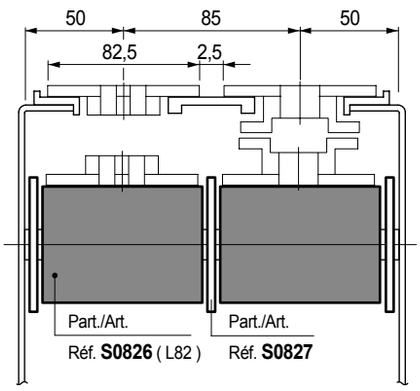

Chain width 84 mm pitch 85 mm

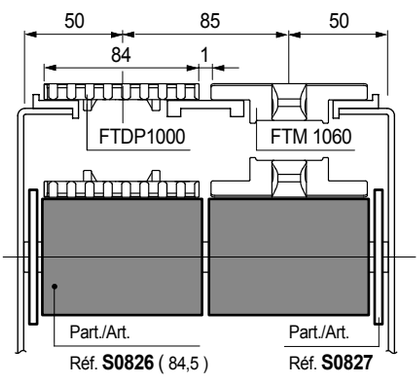

MatTop® modular chains

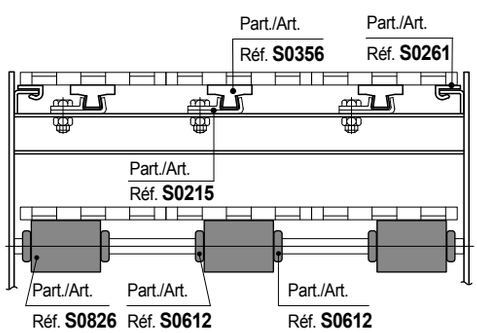

Double roller (with rubber surface)

Part. S0826

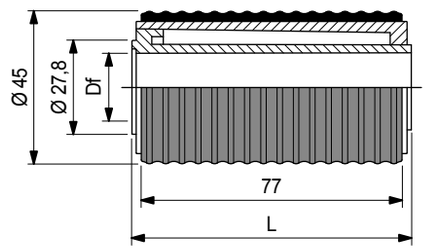

Dia. 45 mm

Shaft dia. mm	Bore dia. Df mm	Code L = 82,5	Code L = 84,5
16	16,5	**632063**	**632083**
20	20,5	**632073**	**632093**

- Characteristics: completely closed design. Rubber surface for less noise even in high speed conveyors. Hub in acetal for low friction.
- Material: roller in polyethylene PE (white). Surface in thermoplastic rubber (grey). 70 shore hardness.
- Packaging: 48 pieces.

Guide flange

Part. S0827

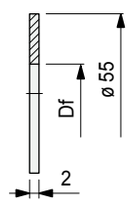

Shaft dia. mm	Shaft dia. inch	Bore dia. Df mm	Code
16	**-**	16,2	**632103**
20	**3/4**	20,2	**632113**

- Material: polyethylene PE (black).
- Packaging: 100 pieces.

Part. S0556

Dia. 60 mm

Roller

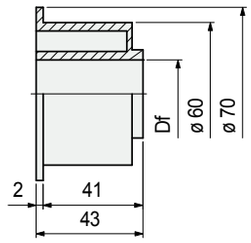

Shaft dia. mm	Bore dia. Df mm	Code
20	20,5	**695251**

- Material: polyethylene PE (black).
- Packaging: 48 pieces.

Part. S0554

Dia. 60 mm

Roller

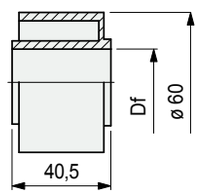

Shaft dia. mm	Bore dia. Df mm	Code
20	20,5	**695171**

- Material: polyethylene PE (black).
- Packaging: 48 pieces.

• **TableTop® chains / PlateTop chains**

Chain width 82,5 mm (K 325)

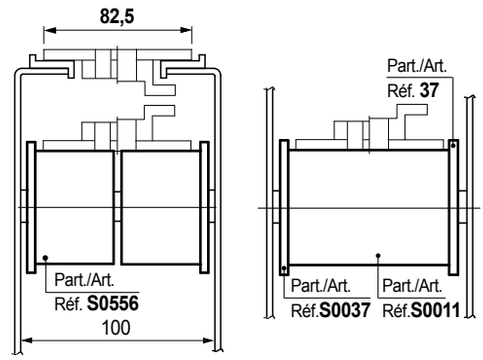

Chain width 82,5 mm (K325) - 101,6 mm (K400)

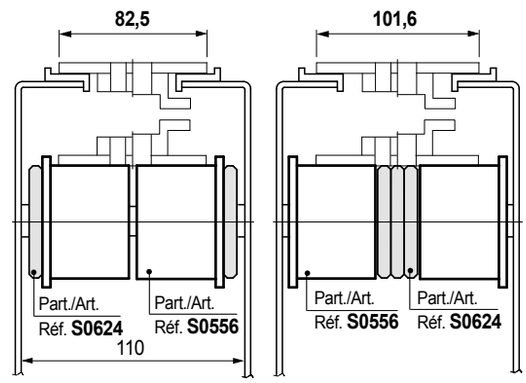

Chain width 114,3 mm (K 450)

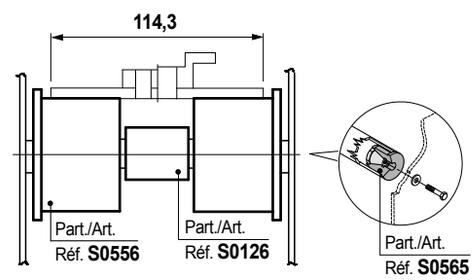

Chain width 82,5 mm (K 325) / Pitch 88 mm

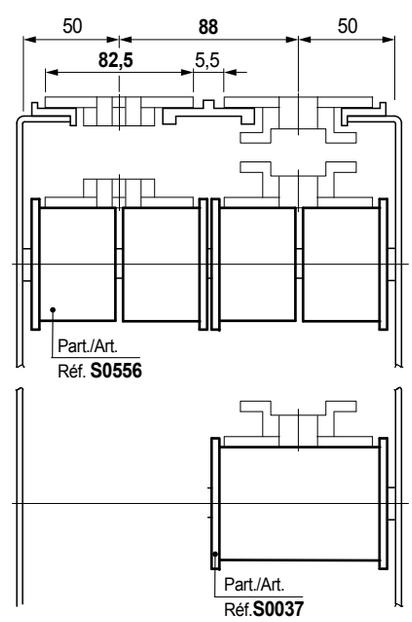

- **TableTop® chains / PlateTop chains**

Chain width 82,5 mm (K 325)

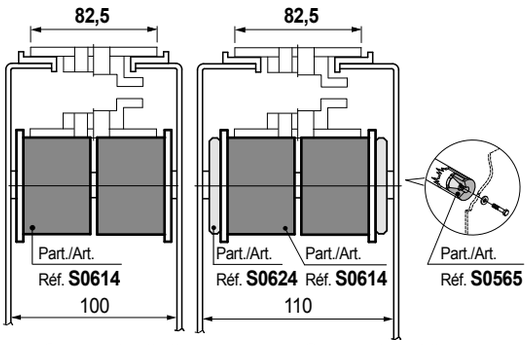

Chain width 101,6 mm (K 400)

Chain width 114,3 mm (K 450)

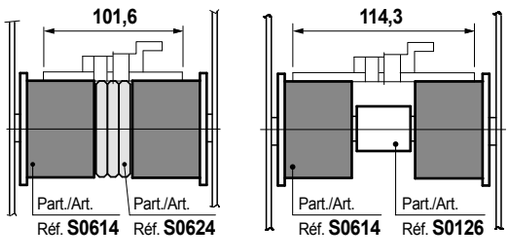

Chain width 82,5 mm (K 325) / Pitch 85 mm

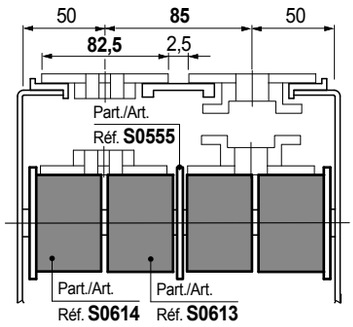

Chain width 82,5 mm (K 325) / Pitch 83,5 mm

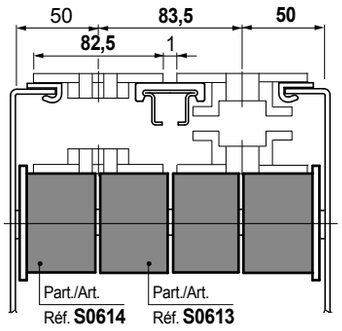

Chain width 114,3 mm (K 450) / Pitch 120 mm

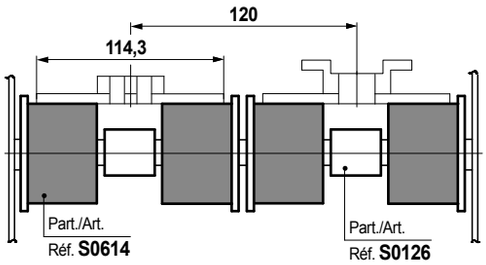

Roller (with rubber surface)

Part. S0614

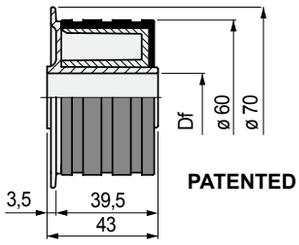

Dia. 60 mm

Shaft dia. mm	Shaft dia. inch	Bore dia. Df mm	Code
12,7	**1/2**	13,2	**632482**
16	**5/8**	16,5	**615392**
19,05	**3/4**	19,5	**635152**
20	**-**	20,5	**615412**

- Characteristics: completely closed design. Rubber surface for less noise even in high speed conveyors. Hub in acetal for low friction.
- Material: roller in acetal POM (black). Surface in thermoplastic rubber (grey). 70 shore hardness.
- Packaging: 48 pieces.

Roller (with rubber surface)

Part. S0613

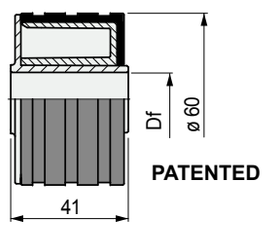

Dia. 60 mm

Shaft dia. mm	Shaft dia. inch	Bore dia. Df mm	Code
12,7	**1/2**	13,2	**632472**
16	**5/8**	16,5	**615352**
19,05	**3/4**	19,5	**635142**
20	**-**	20,5	**615372**

- Characteristics: completely closed design. Rubber surface for less noise even in high speed conveyors. Hub in acetal for low friction.
- Material: roller in acetal POM (black). Surface in thermoplastic rubber (grey). 70 shore hardness.
- Packaging: 48 pieces.

Part. S0758

Dia. 60 mm

Double roller

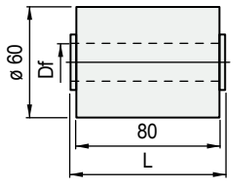

shaft dia. mm	shaft dia. inch	Bore dia. Df mm	Code L = 82	Code L = 84,5
Version PE (Black)				
20	**-**	20,5	**620713**	**620343**

- Characteristics: completely closed design.
- Polyethylene PE (black).
- Packaging: 48 pieces.

Chain width 82,5 mm (K 325)

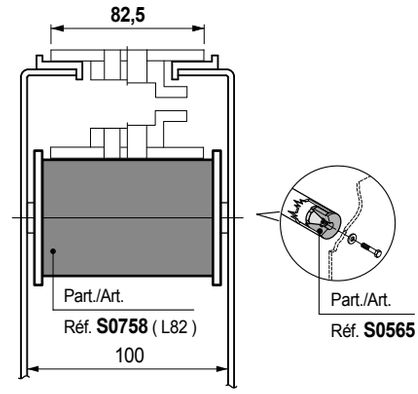

Chain width 82,5 mm (K 325) / Pitch 85 mm

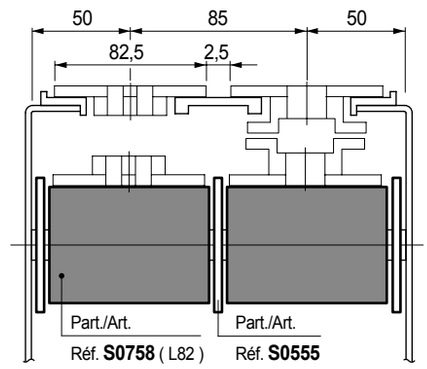

Chain width 84 mm (K 325) / Pitch 85 mm

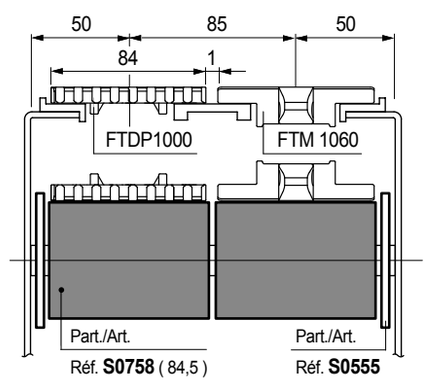

MatTop® modular chains

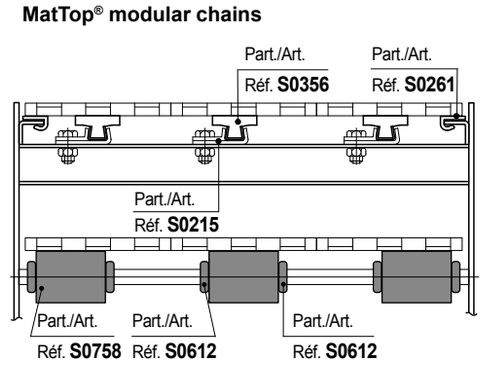

Part. S0555

For Part. S0554
Part. S0613
Part. S0758

Guide flange

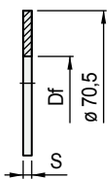

Shaft dia. mm	Shaft dia. inch	Bore dia. Df mm	Code S = 2
20	**3/4**	20,2	**695211**

- Material: Polyethylene PE (black).
- Packaging: 100 pieces.

Chain width 82,5 mm (K 325)

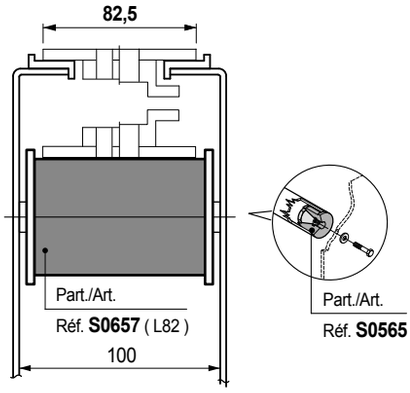

Chain width 82,5 mm (K 325) / Pitch 85 mm

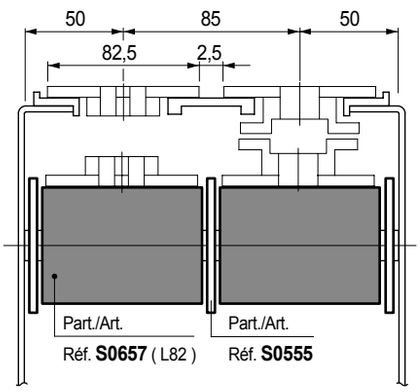

Chain width 84 mm (K 325) / Pitch 85 mm

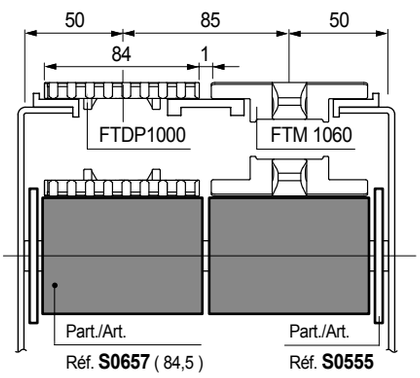

MatTop® modular chains

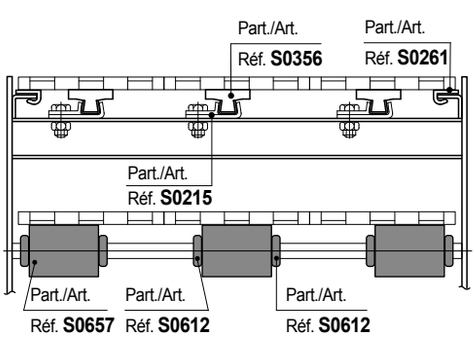

Double roller (with rubber surface)

Part. S0657

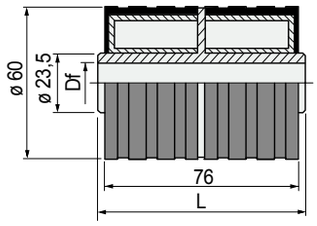

PATENTED

Dia. 60 mm

Shaft dia. mm	Shaft dia. inch	Bore dia. Df mm	Code L = 82	Code L = 84,5
12,7	**1/2**	13,2	**656982**	**-**
16	**5/8**	16,5	**657002**	
18	**-**	18,5	**657012**	
19,05	**3/4**	19,5	**656692**	**-**
20	**-**	20,5	**657022**	**608283**

- Characteristics: completely closed design. Rubber surface for less noise even in high speed conveyors. Hub in acetal for low friction.
- Material: roller in acetal POM. Surface in thermoplastic rubber (black). 70 shore hardness
- Packaging: 48 pieces.

Part. S0729

Chain return guide

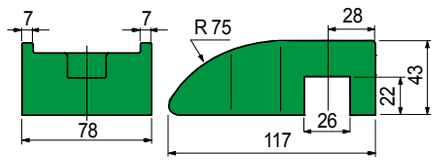

Material	Code	Weight kg
Polyethylene PE (green)	**697662**	0,10

- New design offers less and more uniform wear of chains and better cleanability.
- PE polyethylene (green) version is recommended with plastic chains and metal chains.
- PA polyamide (black) version is recommended only with metal chains.
- Packaging: 25 pieces.

- **Assembly** Part. S0729
  Assembly: press-fit. Interference fixed.
  For assembly schemes see page S40.

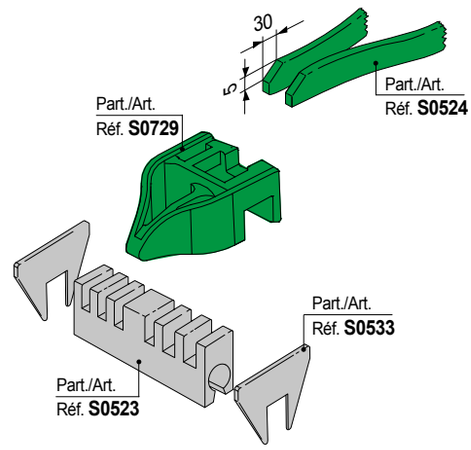

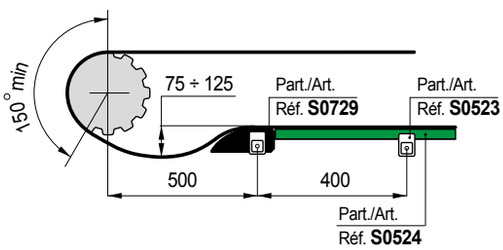

Part. S0524

Sliding profile

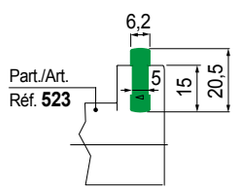

Material	Code
Polyethylene PE (green) 1.000.000	**643501**

- Assembly: Applicable to spacers Part. S0523.
  Snap-on assembly.
- Standard packaging: coil.
- Packaging: 70 metres.

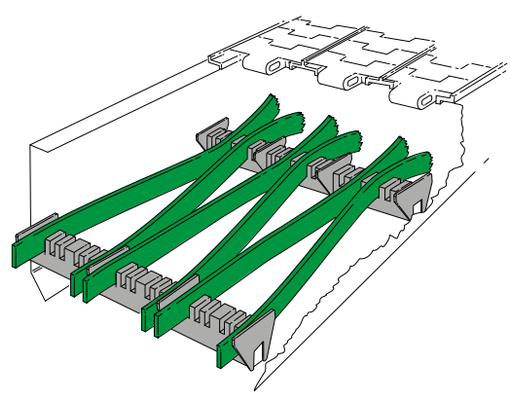

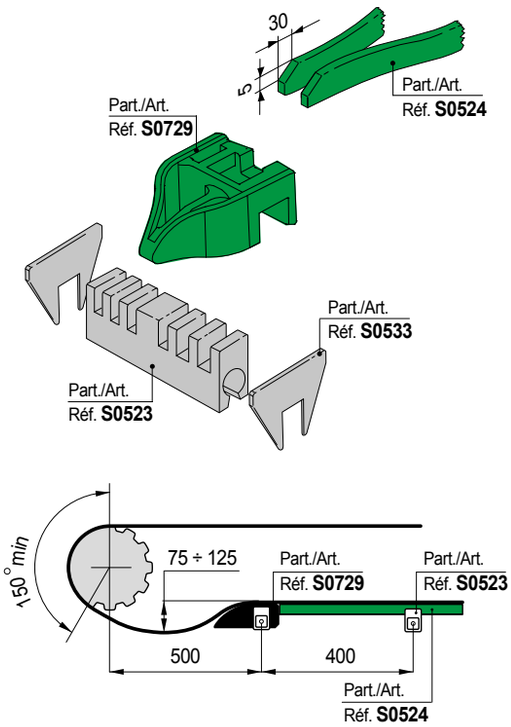

Spacer for square profiles

Part. S0523

Version width L 84 mm

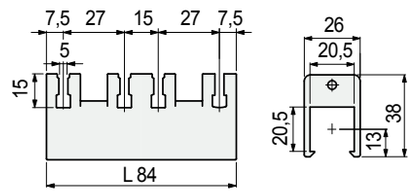

Quare shaft mm	Width L mm	Code	Weight Kg
20 x 20	L 84	**643451**	0,03

- Material: Polyamide PA (black).
- Packaging: 50 pieces.

Spacer for round profile

Part. S0523

Version width **L 84** mm

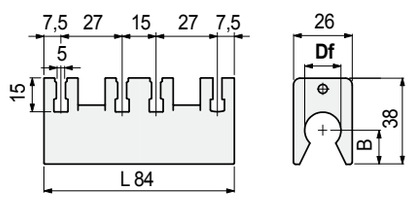

Version width **L 116** mm

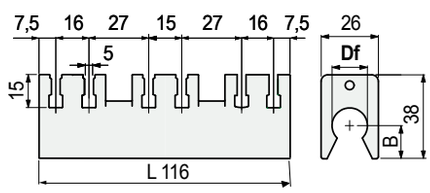

Width L mm	Bore dia. Df mm	Bore dia. Df inch	Code	B mm	Weight Kg
L 84	20	-	**643491**	13	0,04
L 116	20	-	**692132**	13	0,05

- Material: Polyamide PA (black).
- Packaging: 50 pieces.

Notes

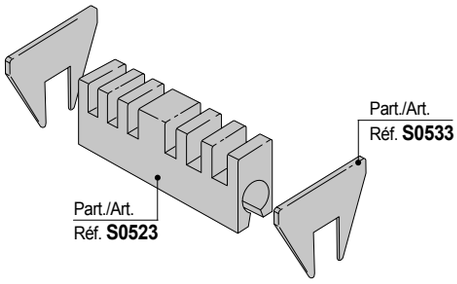

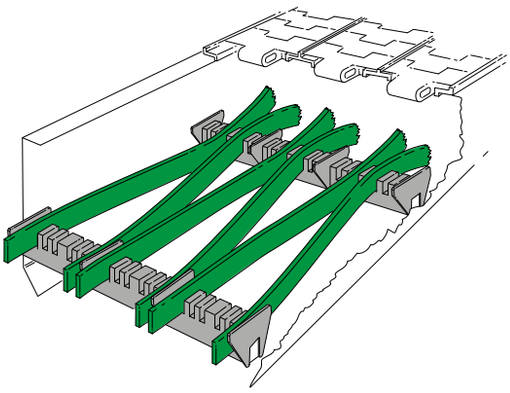

Striker

Part. S0533

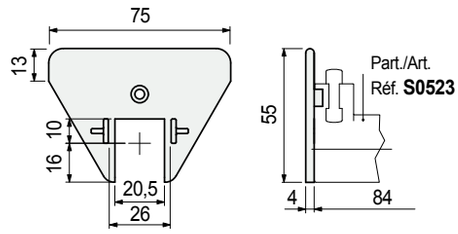

Code	Weight kg
672801	0,01

- Assembly: Applicable to spacers Part. S0523. Snap-on assembly.
- Material: polyamide PA (black).
- Packaging: 100 pieces.

Assembly schemes for
Part: S0729
S0523
S0533
S0524

• **Chain width 82,5 mm (K325)**

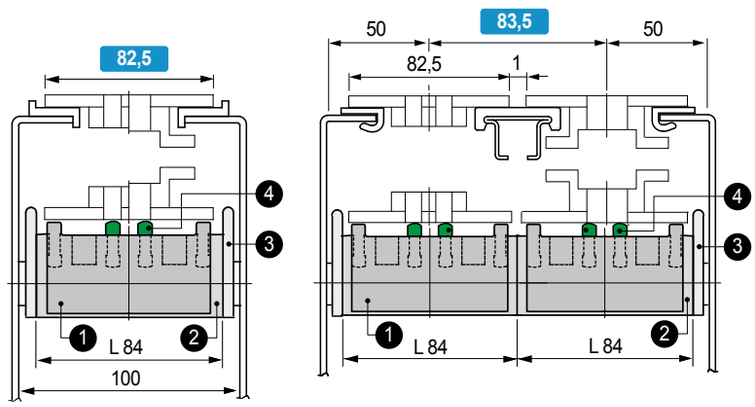

1. Part.S0729 Chain return guide.
2. Part.S0523 Spacer (L 84).
3. Part.S0533 Striker.
4. Part.S0524 Sliding profile.
5. Part.S0533 Striker centre.

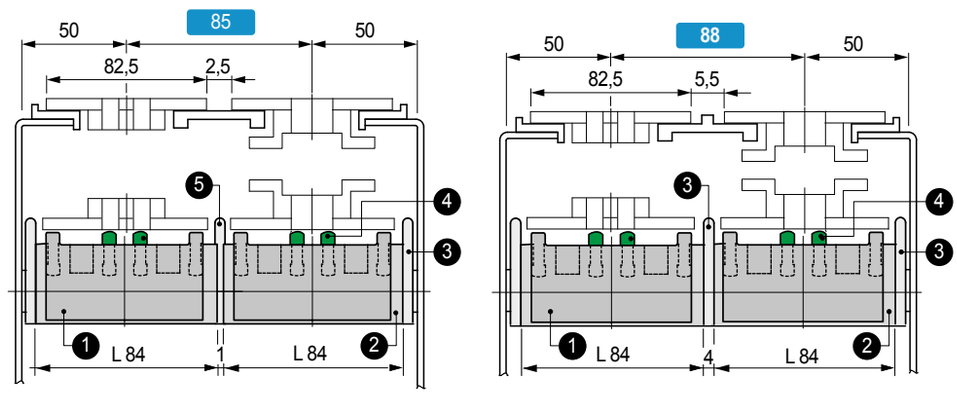

• **Chain width 114,3 mm (K450)**

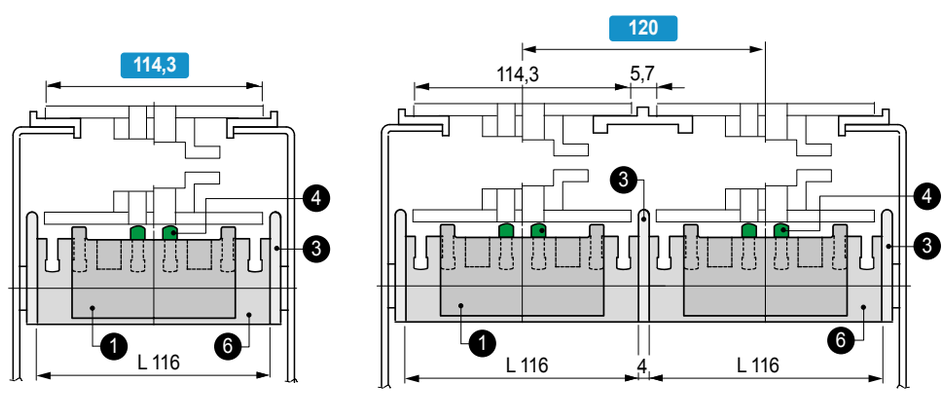

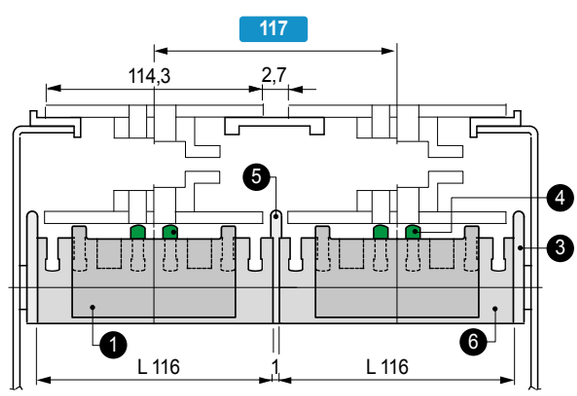

1. Part.S0729 - Chain return guide.
3. Part.S0533 - Striker.
4. Part.S0524 - Sliding profile.
5. Part.S0533 - Striker centre.
6. Part.S0523 - Spacer (L 116).

Notes

www.rexnord.com

Please contact our Application Engineers at +31 174 445 111 for assistance with product selection.

38716.Rexnord Catalog Marbett_3 - ENG S001-S042 blauw_v9.indd 41 18-09-18 08:05

Part. S0565

for round tubes Dia. 18 - 20 mm

Expansion plugs

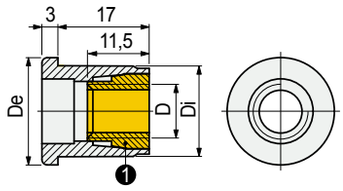

Tube dimensions

1 Expansion cone

Outside mm	Thickness mm	Inside mm	Thread D	De mm	Di mm	Code
Ø 20	1,5	17	M8	20	17	**698681**

- Material: plug in polyamide PA (black), expansion cone in brass.
- Standard packaging: expansion cone is supplied separated from the plug.
- Weight: 0,01Kg.
- Packaging: 100 pieces.
- Max recommended tightening torque: 1 Kgm.

• **Assembly** Part. S0565

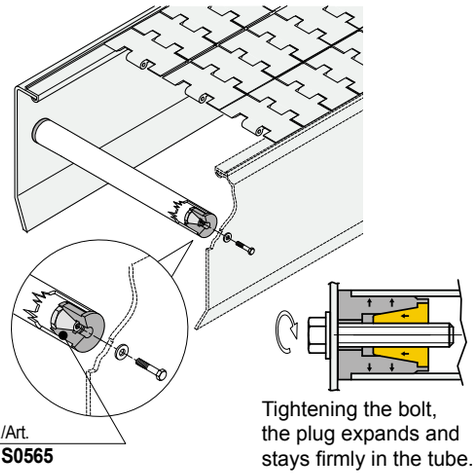

• **Application example** of Part. S0565 for return chain rollers

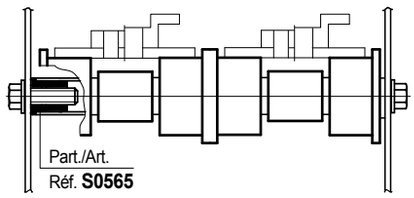

• **Application example** of Part. S0565 for serpentine return

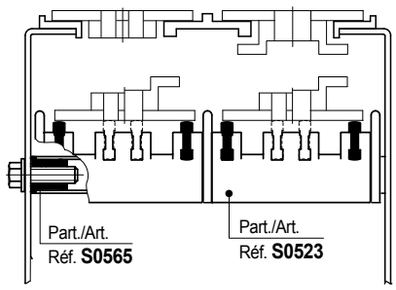

- **Material:** Polyethylene UHMWPE with molecular density 5.600.000 g/mol.
  Characteristics: new material Polyethylene ULF brown red (UHMWPE): reduced friction coefficient, higher wear resistance.
- **Linear expansion coefficient**: 2 x 10^{-4} °C^{-1}
  Calculation of thermal expansion see Technical information.
- **Operating temperature ULF - brown red:**
  In air (- 40 to + 45 °C).
  In hot water (+ 45 °C).
- **Polyethylene ULF is FDA approved**
  Polyethylene ULF complies with the Code of Federal Regulations Title 21, § 177.1520 "Olefin Polymers" of the Food and Drug Administration (FDA) of April 1, 2008.

- **Use** Part. S0771 - S0776
  Overhead transport of PET bottles.

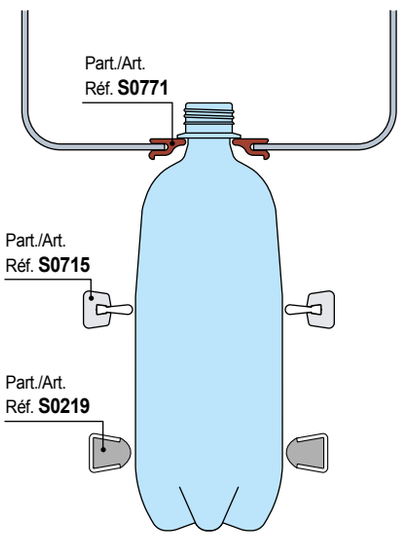

- **Accessories:** see Guide - Rail Clamps

Part./Art./Réf.
S0216 - S0903

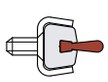

Part./Art./Réf.
S0275

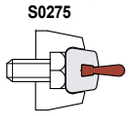

Part./Art./Réf.
S0215

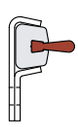

Part./Art./Réf.
S0211 - S0446

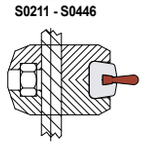

Part./Art./Réf.
S0210 - S0210P

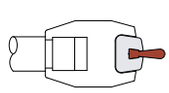

Part./Art./Réf.
S0217

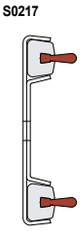

Part./Art./Réf.
S0213

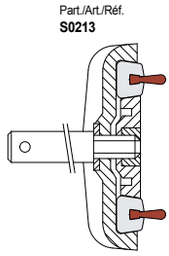

Neck transport guides

Part. S0771

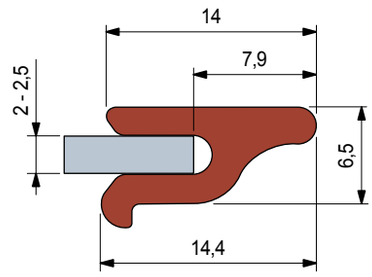

Material UHMWPE	Packaging metres	Code
ULF - brown red	40	**UL626363N**

- Standard packaging: coil.

Guide rail

Part. S0715

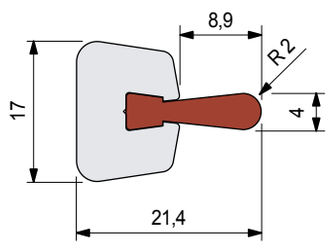

Length metres	Code	Weight kg/m
3	**UL691892N**	0,59

- Material: metal profile in anodized aluminium.
  Plastic profile in Polyethylene ULF (brown red).
- Standard packaging: The plastic and metal profiles are supplied disassembled.
- Min. curvature radius: 500 mm.
- Packaging: 60 metres.

Notes

- **Material:** Polyethylene UHMWPE with molecular density 5.600.000 g/mol.
  Characteristics: new material Polyethylene ULF brown red (UHMWPE): reduced friction coefficient, higher wear resistance.
- **Linear expansion coefficient**: 2 x 10^{-4} °C^{-1}
  Calculation of thermal expansion see Technical information.
- **Operating temperature ULF - brown red:**
  In air (- 40 to + 45 °C).
  In hot water (+ 45 °C).
- **Polyethylene ULF is FDA approved**
  Polyethylene ULF complies with the Code of Federal Regulations Title 21, § 177.1520 "Olefin Polymers" of the Food and Drug Administration (FDA) of April 1, 2008.

- **Use** Part. S0594 - S0654 - S0835
  Overhead transport of PET bottles.

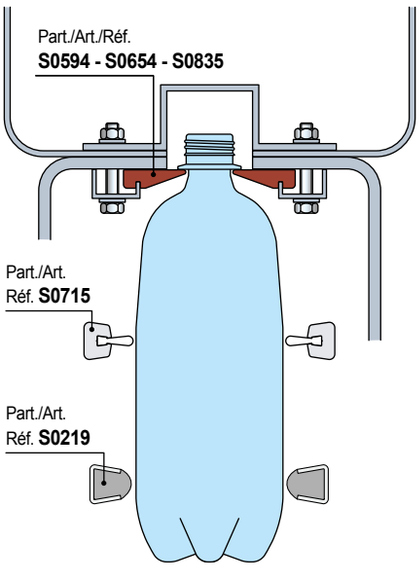

Neck transport guides

Part. S0594

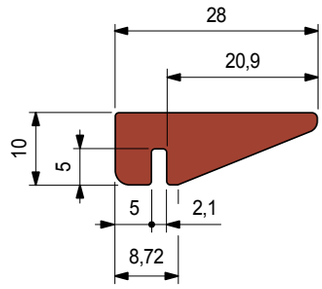

Material UHMWPE	Length metres	Code
ULF - brown red	3	**UL691702N**

- Min. curvature radius: 750 mm.
- Packaging: 45 metres (in 3 m length 10Ft).

Neck transport guides

Part. S0654

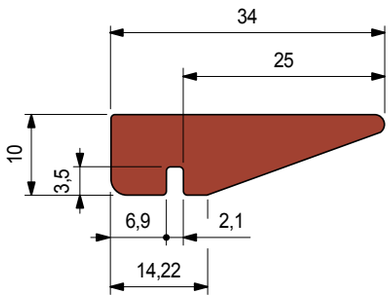

Material UHMWPE	Length metres	Code
ULF - brown red	3	**UL691722N**

- Min. curvature radius: 750 mm.
- Packaging: 24 metres.

Part. S0308

Neck transport guide

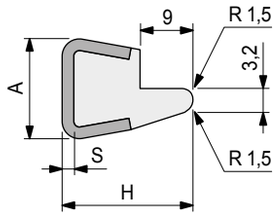

S mm	H mm	A mm
1,5	22,5	16
2	23	17

Thickness S mm	Metal profile material	Length metres	Code	Weight kg/m
Plastic profile in polyethylene UHMWPE (white)				
1,5	Austenitic stainless steel	3	**65602**	0,65

- Min. curvature radius: 160 mm.
- Linear expansion coefficient: 4 x 10^{-5} °C^{-1}.
- Calculation of thermal expansion see Technical information.
- Packaging: 24 metres (in 3 m length 10Ft).
- Accessories:

Guide - Rail Clamps.

- **Material:** Polyethylene UHMWPE with molecular density 5.600.000 g/mol.
  Characteristics: new material Polyethylene ULF brown red (UHMWPE): reduced friction coefficient, higher wear resistance.
- **Operating temperature White, Green, Black:**
  In air (- 40 to + 80 °C).
  In hot water (+ 70 °C).

- **Use of** Part. S0308
  Overhead trasport of PET bottles.

Part./Art.
Réf. **S0308**

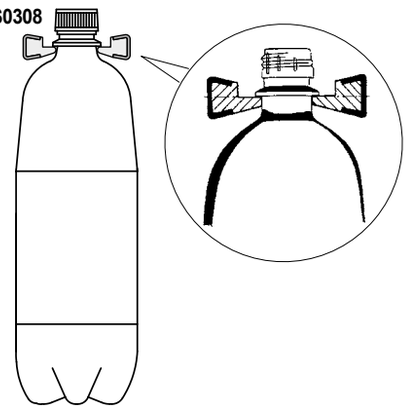

- **Deflection of** Part. S0308 - S0393 - S0596

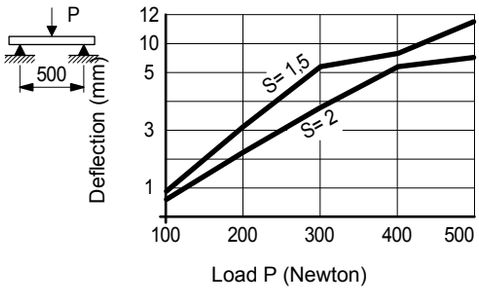

REXNORD

- **Material:** Polyethylene UHMWPE with molecular density 5.600.000 g/mol.
  Characteristics: new material Polyethylene ULF brown red (UHMWPE): reduced friction coefficient, higher wear resistance.
- **Operating temperature White, Green, Black:**
  In air (- 40 to + 80 °C).
  In hot water (+ 70 °C).

- **Use of** Part. S0393

Transport of PET bottles with petaloid bottom. The guide can be used to stabilize, and protect label from damage.

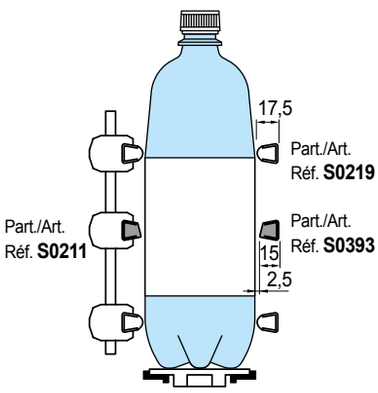

Transport of glass bottles.

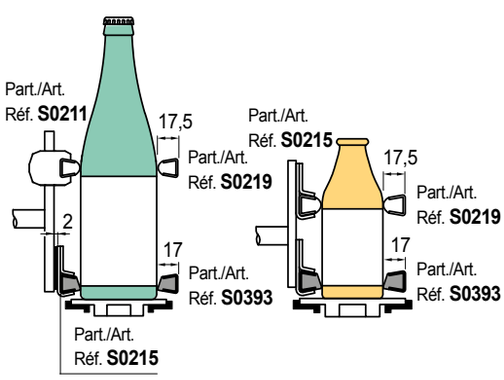

Label protection guide

Part. S0393

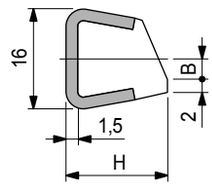

H mm	B mm
15	3,9
17	3,6

Metal profile material	Length metres	H mm	Code	Weight kg/m
Austenitic stainless steel	3	15	**62522**	0,50

- Plastic profile material: polyethylene UHMWPE (white).
- Min. curvature radius: 145 mm.
- Linear expansion coefficient: 4 x 10^{-5} °C^{-1}.
  Calculation of thermal expansion see Technical information.
- Packaging: 24 metres.
- Accessories:

Guide - Rail Clamps.

Part. S0317

Guide rail (half round)

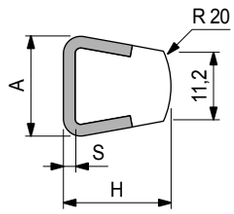

S mm	H mm	A mm
1,5	17,5	16
2	18	17

Thickness S mm	Metal profile material	Length metres	Code	Weight kg/m
Plastic profile in polyethylene UHMWPE (white)				
1,5	Austenitic stainless steel	3	**69072**	0,54
		6	**69302**	

- Min. curvature radius: 145 mm.
- Linear expansion coefficient: 4 x 10^{-5} °C^{-1}.
- Calculation of thermal expansion see Technical information.
- Packaging: 24 metres (in 3 m length 10Ft).
  48 metres (in 6 m length).
- Accessories:

Guide - Rail Clamps.

- **Material:** Polyethylene UHMWPE with molecular density 5.600.000 g/mol.
  Characteristics: new material Polyethylene ULF brown red (UHMWPE): reduced friction coefficient, higher wear resistance.
- **Operating temperature White, Green, Black:**
  In air (- 40 to + 80 °C).
  In hot water (+ 70 °C).

- **Use** of Part. S0317
  Delicate containers
  (ex: empty cans, empty PET).

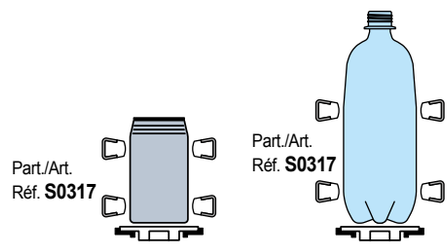

- **Deflection** of Part. S0317 - S0223

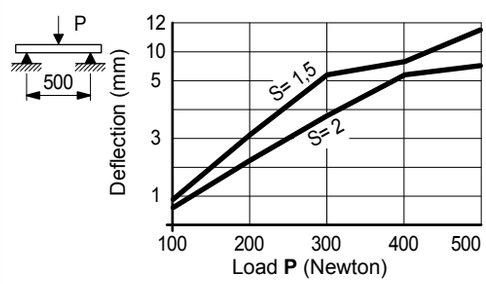

Part. S0223

Neck transport guide

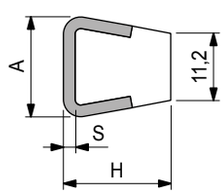

S mm	H mm	A mm
1,5	17,5	16
2	18	17

Thickness S mm	Metal profile material	Length metres	Code	Weight kg/m
1,5	Austenitic stainless steel	3	**61031**	0,54
	Zinc plated steel	3	**63971**	

- Colour: white.
- Antistatic polyethylene UHMWPE (black) available upon request with minimum quantities.
- Min. curvature radius: 145 mm.
- Linear expansion coefficient: 4 x 10^{-5} °C^{-1}.
- Calculation of thermal expansion see Technical information.
- Packaging: 24 metres (in 3 m length 10Ft).
- Accessories:

Guide - Rail Clamps.

Guide rail bending machine (manual) Part. S0218.

- **Use** of Part. S0223
  Middle delicate containers
  (ex: full PET).

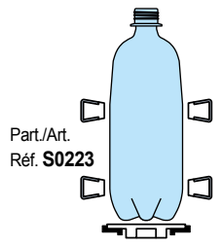

- **Assembly** of Part. S0317 - S0223

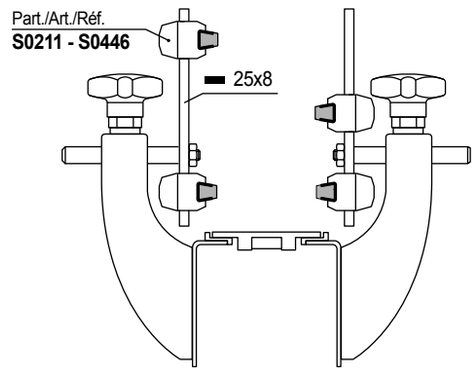

- **Material:** Polyethylene UHMWPE with molecular density 5.600.000 g/mol.
  Characteristics: new material Polyethylene ULF brown red (UHMWPE): reduced friction coefficient, higher wear resistance.
- **Operating temperature White, Green, Black:**
  In air (- 40 to + 80 °C).
  In hot water (+ 70 °C).

- **Use** of S0219 - S0247
  Medium strength containers (ex: latten, glass).

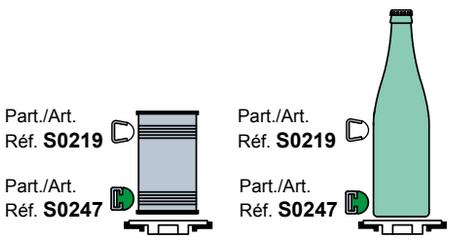

Plastic profile of Part. S0247 can be disassembled.

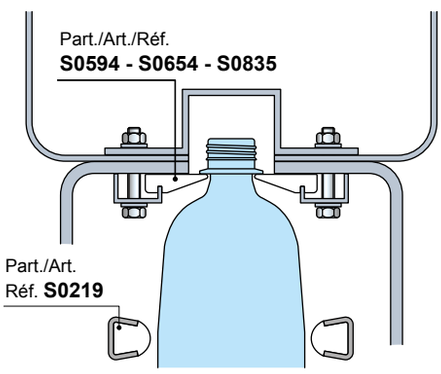

- **Deflection** of Part. S0219

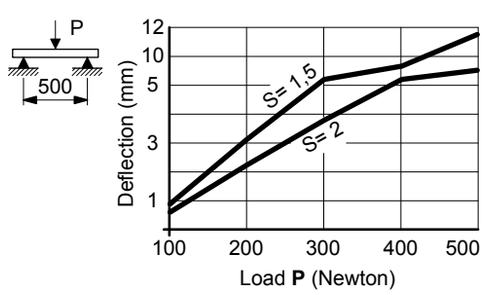

- **Deflection** of Part. S0247

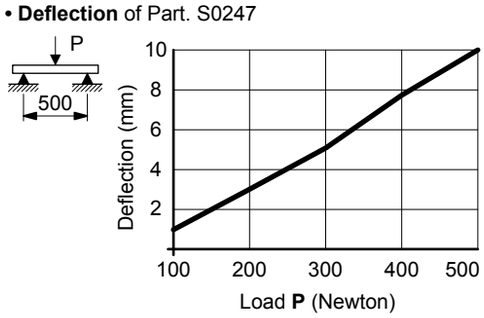

Guide rail (round)

Part. S0219

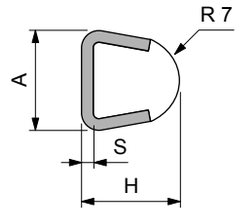

S mm	H mm	A mm
1,5	17,5	16
2	18	17

Thickness S mm	Metal profile material	Length metres	Code	Weight kg/m
Plastic profile in polyethylene UHMWPE (white)				
1,5	Austenitic stainless steel	3	**60161**	0,54
		6	**69292**	
	Zinc plated steel	3	**63961**	
2	Austenitic stainless steel	3	**61753**	
		6	**67113**	
Plastic profile in polyethylene ULF (brown red)				
2	Austenitic stainless steel		**UL634543N**	0,54

- Min. curvature radius: 145 mm.
- Linear expansion coefficient: 4 x 10^{-5} °C^{-1}.
  Calculation of thermal expansion see Technical information.
- Packaging: 12 metres (in 3 m length 10Ft).
  18 metres (in 6 m length).
- Accessories:

Guide - Rail Clamps.

Guide rail (round)

Part. S0247

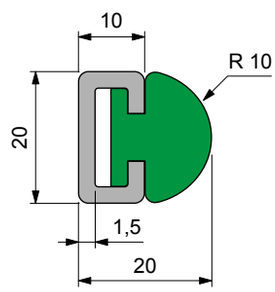

Length metres	Metal profile material	Code	Weight kg/m
Plastic profile material in polyethylene UHMWPE (green)			
3	Austenitic stainless steel	**63911**	0,67
	Zinc plated steel	**63921**	

- Min. curvature radius: 145 mm.
- Linear expansion coefficient: 2 x 10^{-4} °C^{-1}.
  Calculation of thermal expansion see Technical information.
- Accessories:

Guide - Rail Clamps.

Part. S0346

In aluminium

Guide rail (half round)

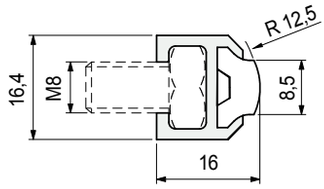

Length metres	Code	Weight kg/m
3	**60204**	**0,24**
6	**60214**	

- Colour: white.
- Metal profile in anodized aluminium.
- Min. curvature radius: 110 mm.
- Linear expansion coefficient: 2 x 10^{-4} °C^{-1}.
- Calculation of thermal expansion see Technical information.
- Packaging: 18 metres (in 3 m length 10Ft).
  96 metres (in 6 m length).
- Accessories:

Guide rail bending machine (manual) Part. S0218.

- **Material:** Polyethylene UHMWPE with molecular density 5.600.000 g/mol.
  Characteristics: new material Polyethylene ULF brown red (UHMWPE): reduced friction coefficient, higher wear resistance.
- **Operating temperature White, Green, Black:**
  In air (- 40 to + 80 °C).
  In hot water (+ 70 °C).

- **Use of** Part. S0346
  Conveyors with limited lateral loads (ex brick).

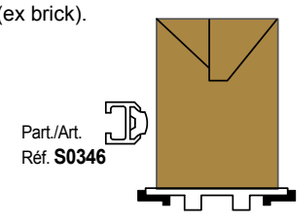

- **Assembly** of Part. S0346

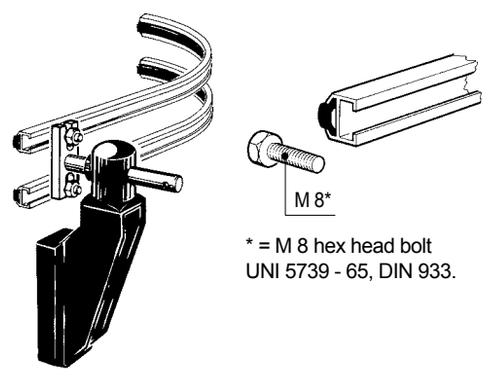

* = M 8 hex head bolt
UNI 5739 - 65, DIN 933.

- **Deflection** of Part. S0346

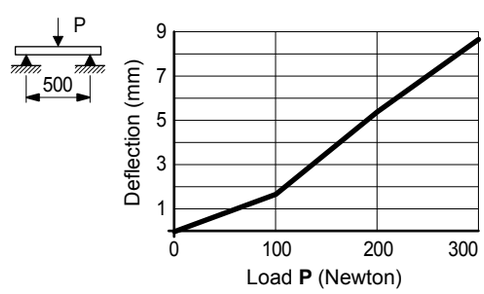

- **Assembly** of Part. S0369
  Insert the guides and tighten the set screws.

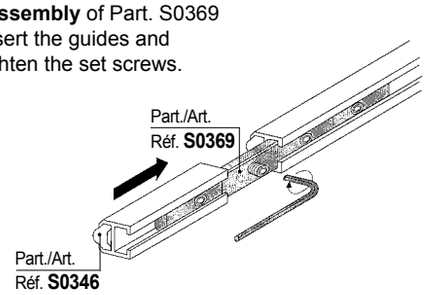

REXNORD

- **Material:** Polyethylene UHMWPE with molecular density 5.600.000 g/mol.
  Characteristics: new material Polyethylene ULF brown red (UHMWPE): reduced friction coefficient, higher wear resistance.
- **Operating temperature White, Green, Black:**
  In air (- 40 to + 80 °C).
  In hot water (+ 70 °C).

- **Use** of Part. S0770 - S0769 Medium strength containers. (ex. latten, glass)

Part./Art.
Réf. **S0769**

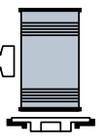

Part./Art.
Réf. **S0769**

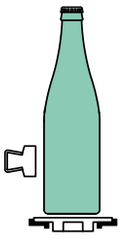

Guide rail (flat)

Part. S0770

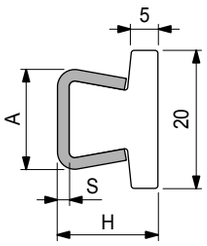

S mm	H mm	A mm
1,5	17	16
2	17,5	17

Thickness S mm	Metal profile material	Length metres	Code	Weight kg/m
2	Austenitic stainless steel	3	**609213N**	0,71

- Colour: white.
- Antistatic polyethylene UHMWPE (black) available upon request with minimum quantities.
- Min. curvature radius: 160 mm.
- Linear expansion coefficient: 4 x 10^{-5} °C^{-1}.
- Calculation of thermal expansion see Technical information.
- Packaging: 24 metres.
- Accessories:

Guide - Rail Clamps.

Part. S0768

Guide rail (flat)

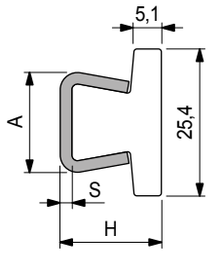

S mm	H mm	A mm
1,5	17	16
2	17,5	17

Thickness S mm	Metal profile material	Length metres	Code	Weight kg/m
1,5	Austenitic stainless steel	3	**609083N**	0,63
2	Austenitic stainless steel	3	**609113N**	0,74

- Colour: white.
- Antistatic polyethylene UHMWPE (black) available upon request with minimum quantities.
- Min. curvature radius: 160 mm.
- Linear expansion coefficient: 4 x 10^{-5} °C^{-1}.
- Calculation of thermal expansion see Technical information.
- Packaging: 24 metres.
- Accessories:

Guide - Rail Clamps.

Part. S0767

Guide rail (flat)

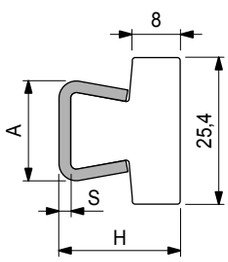

S mm	H mm	A mm
1,5	20,5	16
2	21	17

Thickness S mm	Metal profile material	Length metres	Code	Weight kg/m
2	Austenitic stainless steel	3	**609063N**	0,82

- Colour: white.
- Min. curvature radius: 160 mm.
- Linear expansion coefficient: 4 x 10^{-5} °C^{-1}.
- Calculation of thermal expansion see Technical information.
- Packaging: 24 metres.
- Accessories:

Guide - Rail Clamps.

- **Material:** Polyethylene UHMWPE with molecular density 5.600.000 g/mol.
  Characteristics: new material Polyethylene ULF brown red (UHMWPE): reduced friction coefficient, higher wear resistance.
- **Operating temperature White, Green, Black:**
  In air (- 40 to + 80 °C).
  In hot water (+ 70 °C).

- **Use** of Part. S0770 - S0769 Medium strength containers (ex. latten, glass)

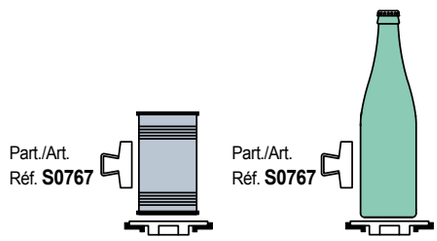

- **Material:** Polyethylene UHMWPE with molecular density 5.600.000 g/mol.
  Characteristics: new material Polyethylene ULF brown red (UHMWPE): reduced friction coefficient, higher wear resistance.
- **Operating temperature White, Green, Black:**
  In air (- 40 to + 80 °C).
  In hot water (+ 70 °C).

- **Use of** Part. S0273
  Rugged containers with delicate surface (ex. decorated glass bottles).

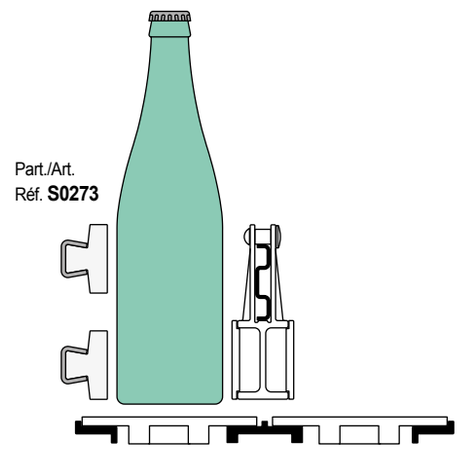

- **Deflection** of Part. S0273

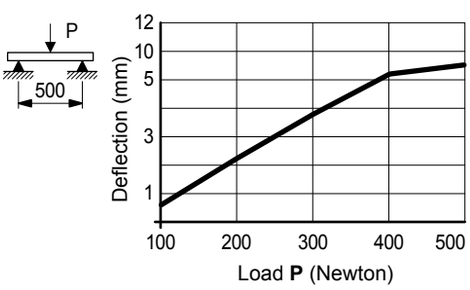

- **Use of** Part. S0765
  Rugged containers with delicate surface (ex. decorated glass bottles).

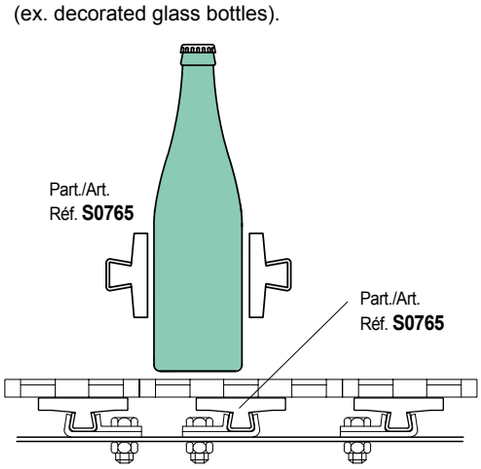

Guide rail (extra-flat)

Part. S0273

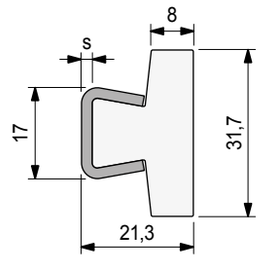

Thickness S mm	Metal profile material	Length metres	Code	Weight kg/m
Plastic profile in polyethylene UHMWPE (white)				
2	Austenitic stainless steel	3	**66791**	0,76
		6	**67602**	

- Antistatic polyethylene UHMWPE (black) available upon request with minimum quantities.
- Min. curvature radius: 160 mm.
- Linear expansion coefficient: 4 x 10^{-5} °C^{-1}.
- Calculation of thermal expansion see Technical information.
- Packaging: 12 metres (in 3 m length 10Ft).
  18 metres (in 6 m length).
- Accessories:

Guide - Rail Clamps.

Guide rail (extra-flat)

Part. S0765

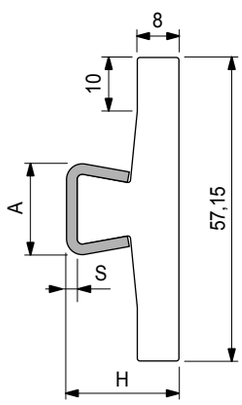

S mm	H mm	A mm
1,5	20,5	16
2	21	17

Thickness S mm	Metal profile material	Length metres	Code	Weight kg/m
1,5	Austenitic stainless steel	3	**608943N**	0,95
2	Austenitic stainless steel	6	**608983N**	1,06

- Colour: white.
- Min. curvature radius: 200 mm.
- Linear expansion coefficient: 4 x 10^{-5} °C^{-1}.
- Calculation of thermal expansion see Technical information.
- Packaging: 24 metres.
- Accessories:

Guide - Rail Clamps.

Part. S0422

Guide rail (extra flat)

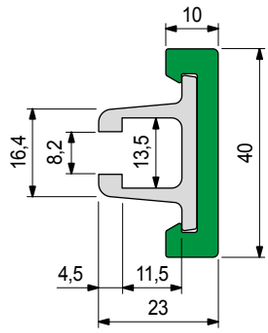

Metal profile material	Length metres	Code	Weight kg/m
Anodized aluminium	3	**65248M**	0,70
	6	**65258M**	

- Use: rugged containers.
- Material: plastic profile in polyethylene UHMWPE (green).
- State of supply: the plastic and metal profiles are supplied assembled.
- Plastic Profile spare part. (green): S088568309 (6 metres).
- Plastic Profile spare part. (ULF): S0885648423 (6 metres).
- Metal Profile in Anodized aluminium spare part: S0884608662 (3 metres).
- Min. curvature radius: 280 mm.
- Packaging: 24 metres.

- **Material:** Polyethylene UHMWPE with molecular density 5.600.000 g/mol.
  Characteristics: new material Polyethylene ULF brown red (UHMWPE): reduced friction coefficient, higher wear resistance.
- **Linear expansion coefficient:** 2 x 10^{-4} °C^{-1}
  Calculation of thermal expansion see Technical information.
- **Operating temperature Green Black:**
  In air (- 40 to + 80 °C).
  In hot water (+ 70 °C).

- **Deflection**

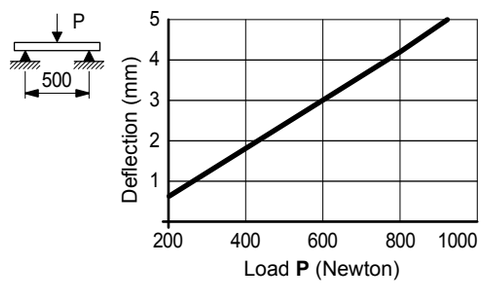

- **Fixing** of Part. S0422

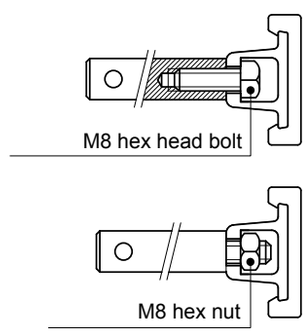

Part. S0369

Connecting bar

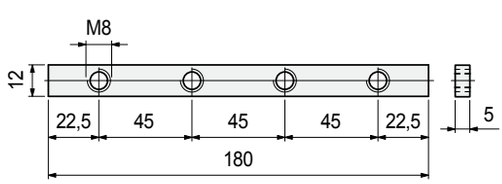

Material	Code	Weight kg/m
Zinc plated steel	**69995**	0,10

- Packaging: 8 pieces.

- **Assembly** of Part. S0369
  Insert the guides and tighten the set screws.

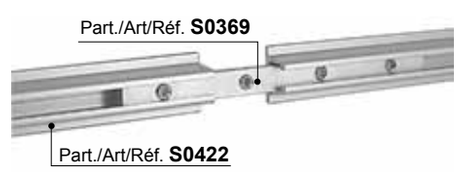

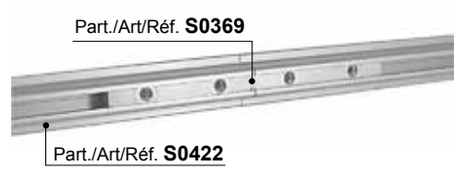

Notes

www.rexnord.com

Please contact our Application Engineers at +31 174 445 111 for assistance with product selection.

38716.Rexnord Catalog Marbett_4 - ENG S043-S085 blauw_v9.indd 55 18-09-18 08:11

Part. S0642

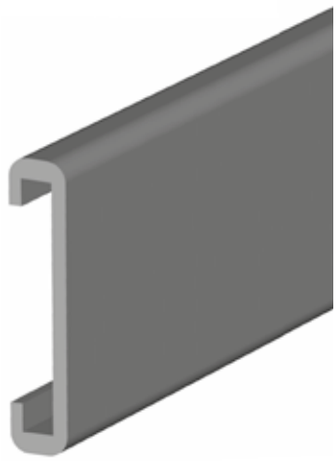

Guide rail (extra flat)

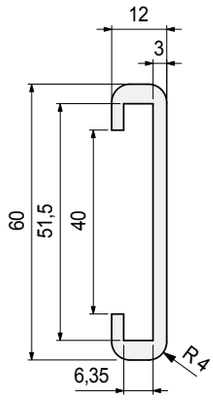

Material UHMWPE	Length metres	Code
Black	3	**652292**

- Linear expansion coefficient: 2 x 10^{-4} °C^{-1}.
  Calculation of thermal expansion see Technical information.
- Packaging: 3 metres.
- Accessories:

Metal profile
Part. S0643.

• **Use of** Part. S0642 - S0643
Rugged containers with delicate surface (for example decorated glass bottles).

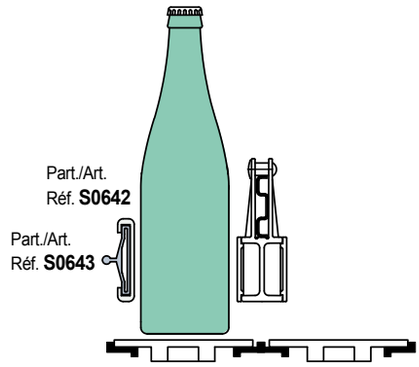

Part. S0643

Metal profile

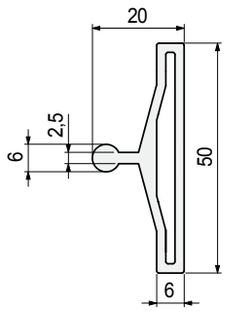

Metal profile material	Length metres	Code
Anodized aluminium	3	**652302**

- Can be used in combination with Part. S0642.
- Packaging: 3 metres.
- Accessories:

Guide - Rail
Clamps.

REXNORD

• **Use of** Part. S0645
Protection of round steel rods

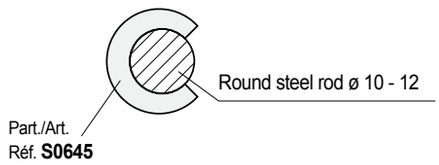

• **Fixing of** Part. S0539
Assembly / disassembly

- Fixing with plate.

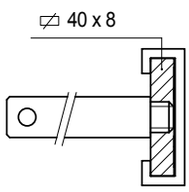

- Fixing with metal profile Part. S0537.

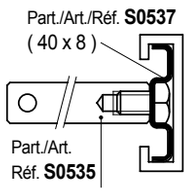

Profile for round steel rods

Part. S0645

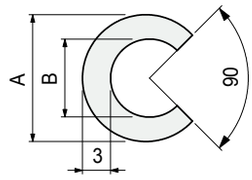

Material UHMWPE	Use	A mm	B mm	Code
White	for rod ø 12	17	11	**652352**

- Linear expansion coefficient: 2 x 10^{-4} °C^{-1}.
- Standard packaging: coil.
- Packaging: 50 metres.

Guide rail (extra flat)

Part. S0539

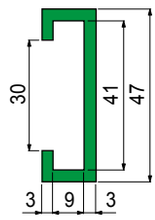

Material	Length metres	Code	Weight kg/m
Black	6	689321	0,23
Green	3	**689291**	

- Material: Polyethylene PE 500.000.
- Linear expansion coefficient: 2,5 x 10^{-4} °C^{-1}.
Calculation of thermal expansion see Technical information.
- Packaging: 24 metres (in 3 m length).
48 metres (in 6 m length).
- Accessories:

Metal profile 40x8
Part. S0537

Part. S0191
Part. S0296

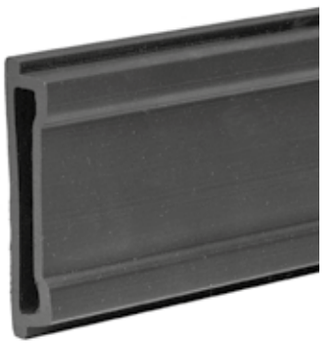

Guide rail (extra-large)

Part. S0191

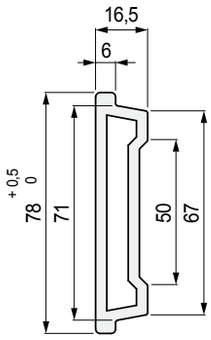

Part. S0296

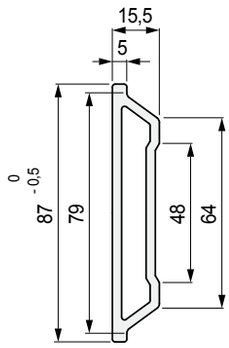

Material	Length metres	Code	Weight kg/m
Black	3	**S019157131**	0,60
	3	**S029668811**	

- Material: polyethylene PE 500.000.
- Min. curvature radius: 200 mm.
- Linear expansion coefficient: 2,5 x 10^{-4} °C^{-1}.
  Calculation of thermal expansion see Technical information.
- Packaging: 15 metres (in 3 m length).
- Accessories:

Guide - Rail Clamps.

Guide rail bending machine (manual) Part. S0218.

• **Use** of Part. S0191 - S0296

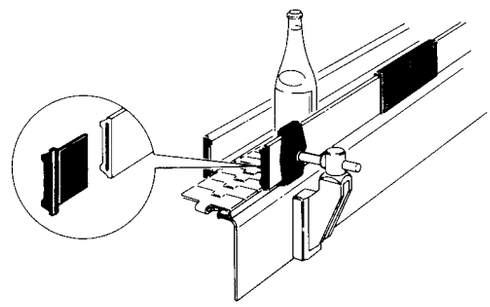

• The guide rails must be used with a 60 x 6 plate

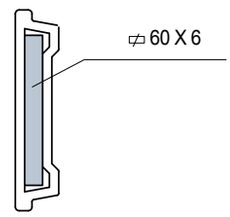

• **Deflection** of Part. S0191 - S0296

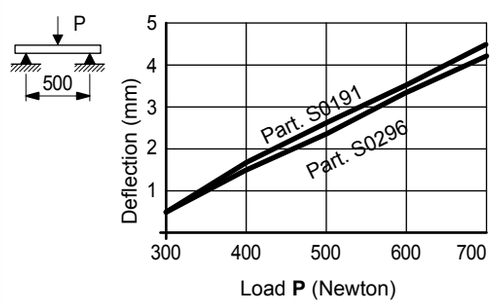

• **Assembly** of Part. S0376 - S0377
Press-fit.
Seal with silicon.

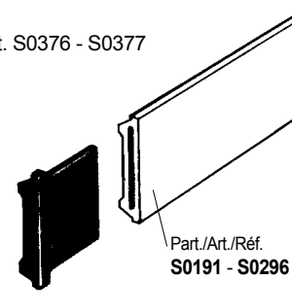

• Leave a gap between the plug and the plate to allow for contraction at low temperatures.

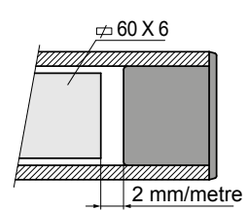

• **Assembly of** Part. S0378
Assembly with self-tapping screws
4,8 x 9,5 DIN 7970

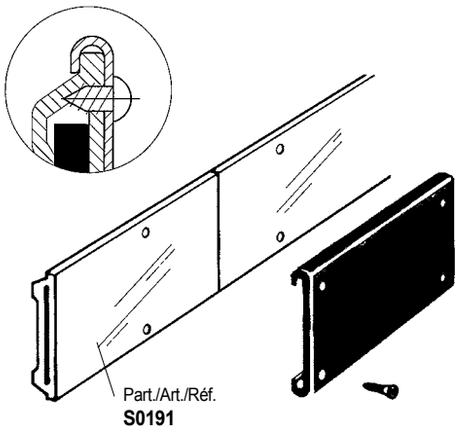

Joint clamp

Part. S0378

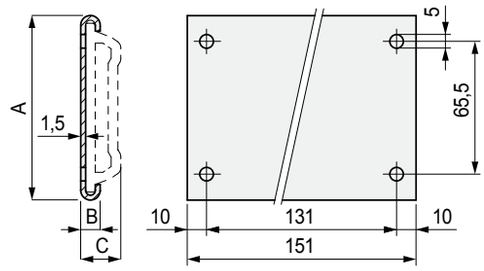

Use	A mm	B mm	C mm	Code
Applicable to Part. S0191	81,5	9	18	**S037863646**

- Material: clamp and fixing screws in austenitic stainless steel.
- Standard packaging: 24 pieces complete with fixing screws.

Part. S0581

Sideflexing

Roller side guide

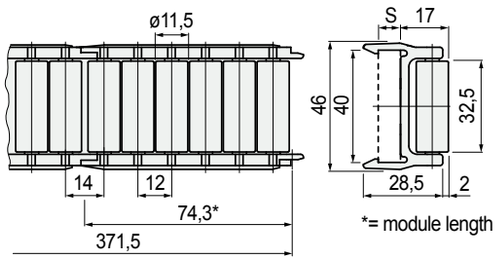

Version	S mm	Code	Weight kg/m
For 40x8 plate	6	**603322**	0,62

- Material: frame in acetal POM (black), rollers in Polyethylene PE (white).
- Standard packaging: strands of 0,371 metres (5 modules).
- Packaging: 4,5 metres (12 strands).
- Accessories:

Metal profile
40x8
Part. S0537

• **Use** of Part. S0581- S0585
For thin walled and delicate containers (like aluminium cans, PET bottles, decorated card-board).

• **Fixing** of Part. S0581
Snap-on assembly / disassembly

- Fixing with plate.

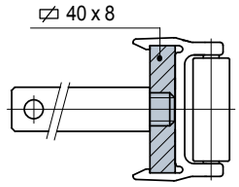

- Fixing with metal profile Part. S0537.

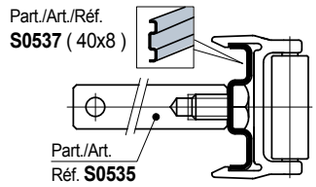

• **Min. curvature radius** Part. S0581

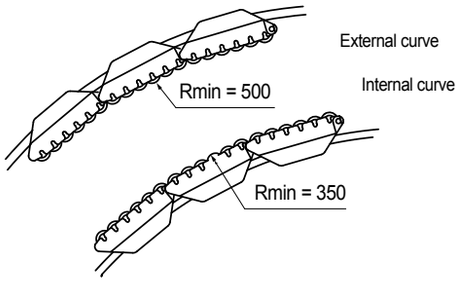

• **Use** of Part. S0581- S0585
For thin walled and delicate containers (like aluminium cans, PET bottles, decorated card-board).

• **Fixing** of Part. S0581
Snap-on assembly / disassembly

- Fixing with plate.

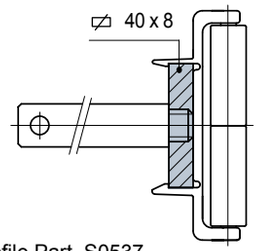

- Fixing with metal profile Part. S0537.

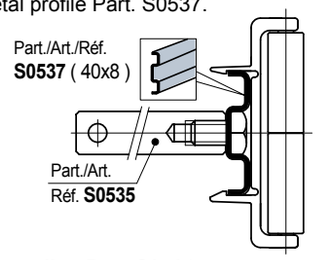

• **Min. curvature radius** Part. S0581

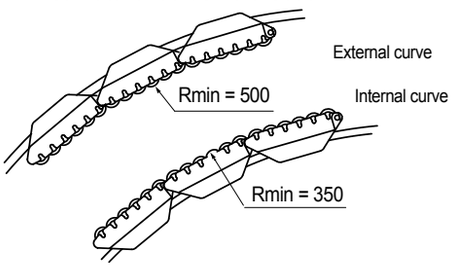

- Fixing with plate.

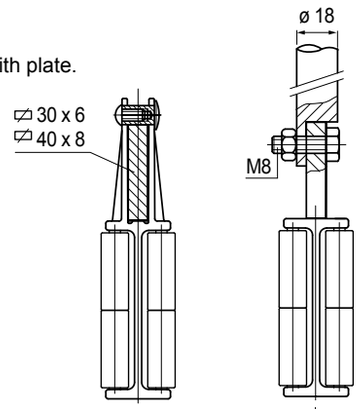

- Fixing with metal profile Part. S0537.

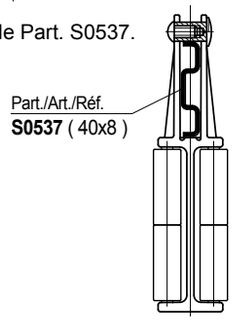

• **Fixing** of Part. S0585
Assembly / disassembly.

• **Modular system** Part. S0581 - S0585
The guide consists of modules with snap-on assembly.

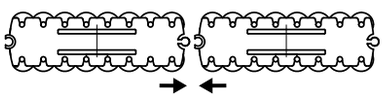

Roller side guide

Part. S0581

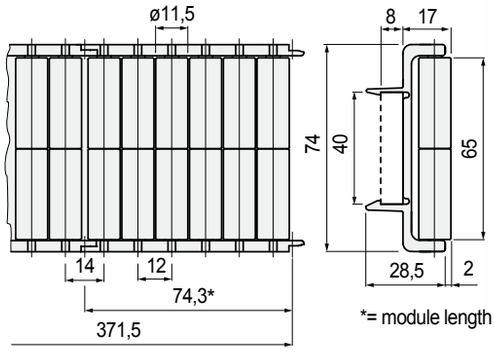

Sideflexing

Version	Code	Weight kg
For 40x8 plate	**603312**	1,01

- Material: frame in acetal POM (black), rollers in Polyethylene PE (white).
- Standard packaging: strands of 0,371 metres (5 modules).
- Packaging: 4,5 metres (12 strands).
- Accessories:

Metal profile
40x8
Part. S0537

Part. S0580

Sideflexing

Roller side guide

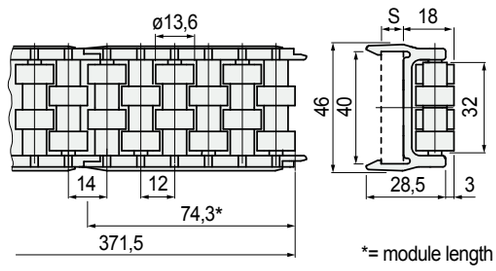

*= module length

Version	S mm	Code	Weight kg/m
For 40x8 plate	8	**603302**	0,61
For 40x10 plate	10	**611772**	

- Material: frame in Acetal POM (black), rollers in Acetal POM (white).
- Standard packaging: strands of 0,371 metres (5 modules).
- Packaging: 4,5 metres (12 strands).
- Accessories:

Metal profile
40x8
Part. S0537

• **Fixing** of Part. S0580
Snap-on assembly / disassembly

- Fixing with plate.

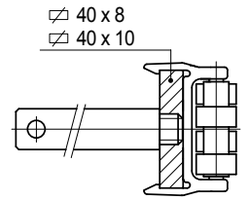

- Fixing with metal profile Part. S0537.

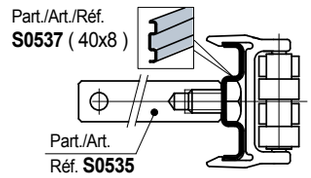

• **Min. curvature radius** Part. S0580

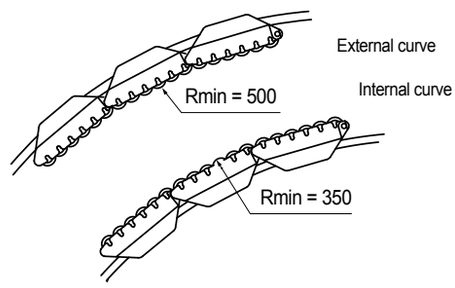

Part. S0557

Sideflexing

Centre roller guide

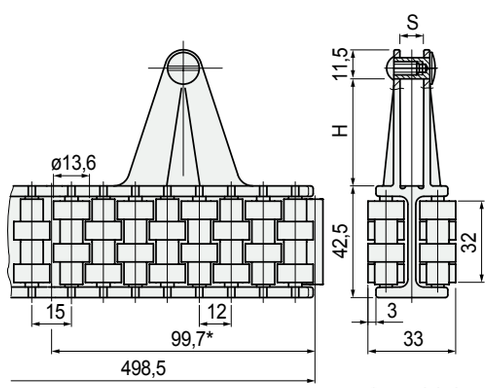

*= module length

Version	H mm	S mm	Code	Weight kg/m
For 30x6 plate	40	8	**695991N**	1,22

- Can be used in combination with Part. S0580.
- Material: frame in Acetal POM (black), rollers in Acetal POM (white).
- Min. curvature radius: 335 mm.
- Standard packaging: strands of 0,498 metres (5 modules).
- Packaging: 4,5 metres (9 strands).
- Accessories:

Metal profile
40x8
Part. S0537

• **Fixing** of Part. S0557
Assembly / disassembly.

- Fixing with plate.

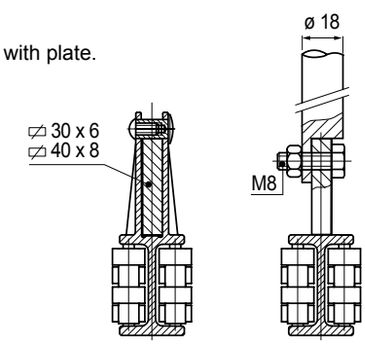

- Fixing with metal profile Part. S0537.

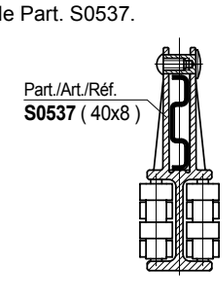

• **Modular system Part.** S0580 - S0557
The guide consists of modules with snap-on assembly.

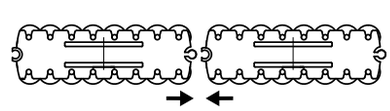

REXNORD

Part. S0570

• **Assembly of** Part. S0570
Guide position (Part. S0557) to allow assembly with divider module.

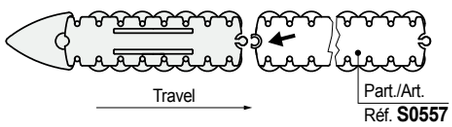

Divider module

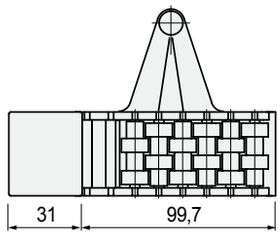

Version	Code	Weight kg
For 40x8 plate	**601162N**	0,15

- Material: frame in Acetal POM (black), rollers in Acetal POM (white). Separation block in polyethylene PE (black).
- Packaging: 2 pieces.

• **Use** of Part. S0580 - S0557
For medium strength containers (tin cans, glass strong aluminium cans).

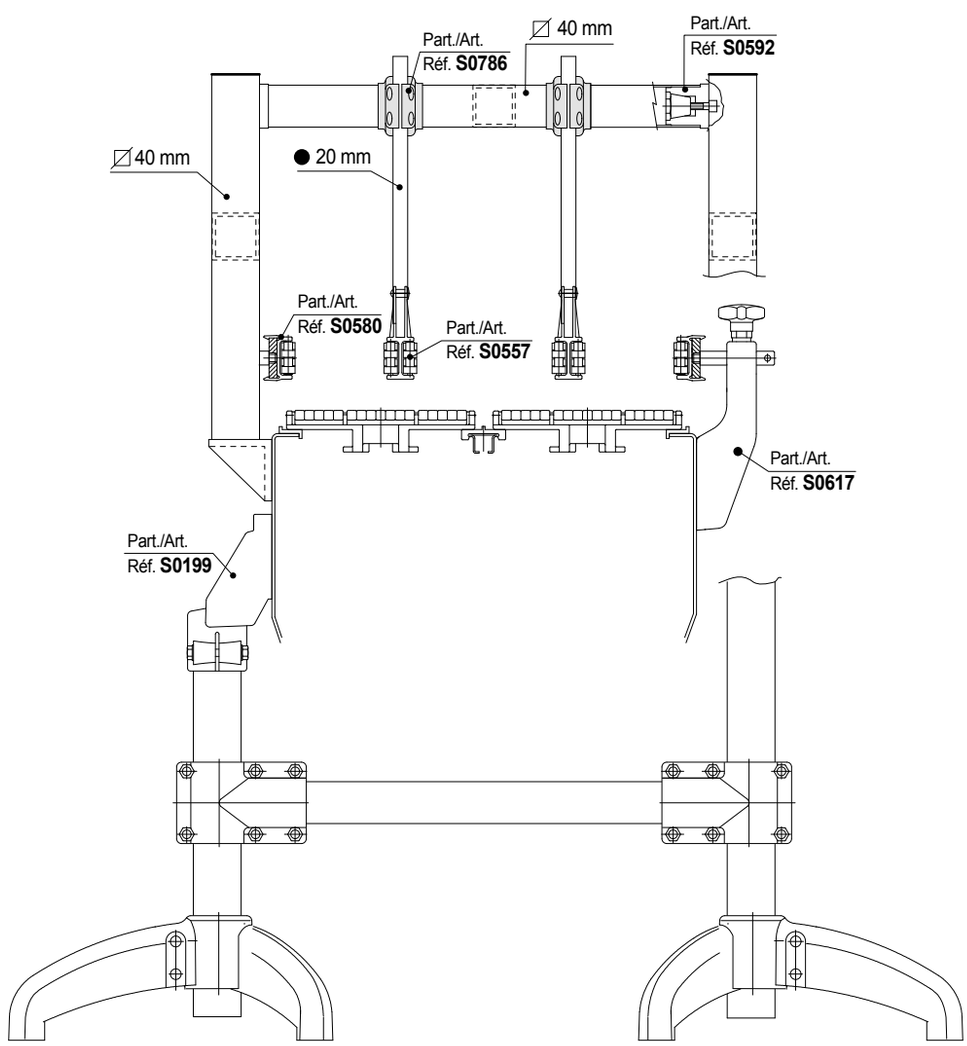

Part. S0580

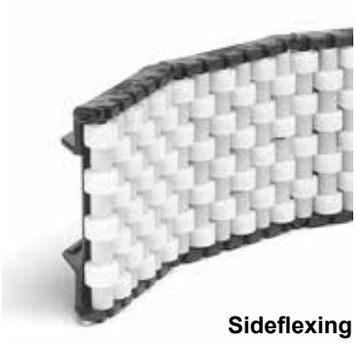

Sideflexing

Roller side guide

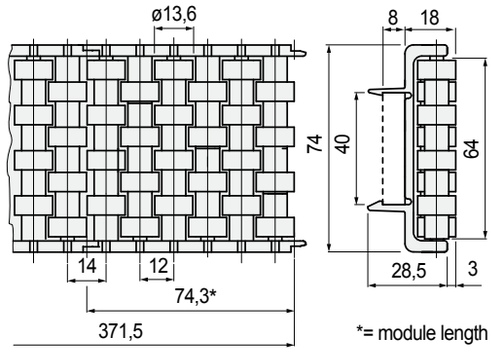

Version	Code	Weight kg
For 40x8 plate	**603292**	0,99

- Material: frame in Acetal POM (black), rollers in Acetal POM (white).
- Standard packaging: strands of 0,371 metres (5 modules).
- Packaging: 4,5 metres (12 strands).
- Accessories:

Metal profile
40x8
Part. S0537

• **Use** of Part. S0580 - S0557
For medium strength containers (tin cans, glass, strong aluminium cans).

• **Fixing** of Part. S0580
Snap-on assembly / disassembly

- Fixing with plate.

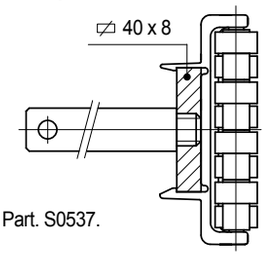

- Fixing with metal profile Part. S0537.

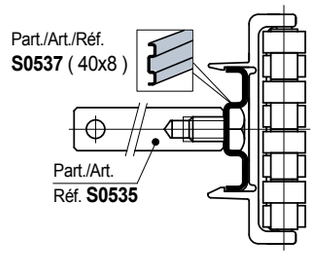

• **Min. curvature radius** Part. S0580

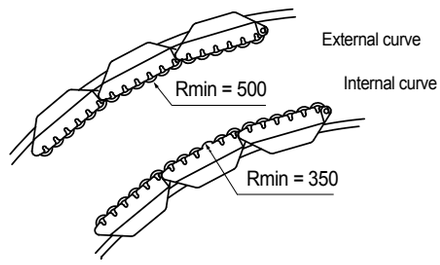

- Fixing with plate.

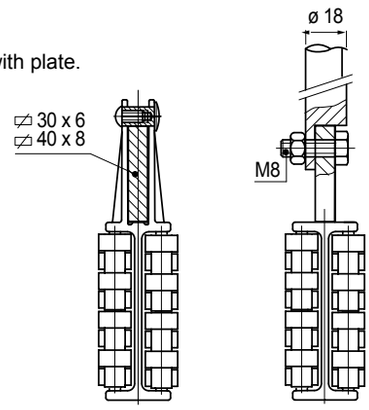

- Fixing with metal profile Part. S0537.

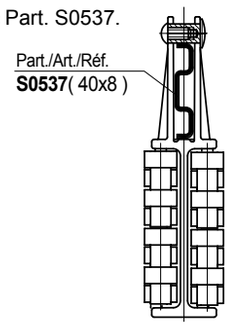

• **Fixing** of Part. S0557
Assembly / disassembly.

• **Modular system Part.** S0580 - S0557
The guide consists of modules with snap-on assembly.

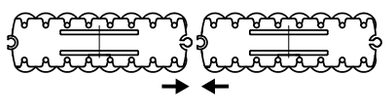

• **Types of guides**
using our 40x8 metal profile.

Part. S0539

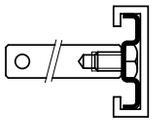

Part. S0580

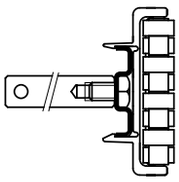

Part. S0557

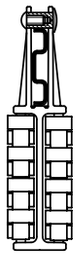

Part. S0581

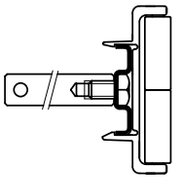

• **Deflection** of Part. S0537

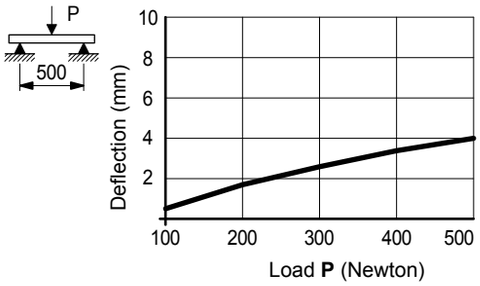

Metal profile 40x8

Part. S0537

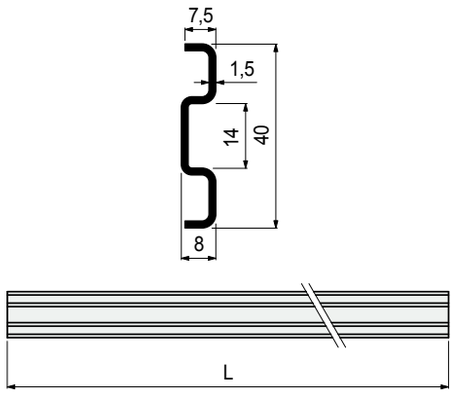

Material	Length L mm	Code
Austenitic stainless steel	3209	**689231**

- Min. curvature radius: 500 mm.
- Weight: 0,72 Kg/m.
- Packaging: 19,25 metres (in 3209 mm length),
- Accessories:

Bolts set

Part. S0535

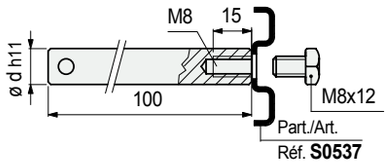

pin dia. d mm	Code	Weight kg/m
12	**684641**	0,12

- Material: austenitic stainless steel.
- State of supply: complete with screw M8 x 12.
- Packaging: 24 pieces.

Part. S0757

Roller side guides with cylinder rollers

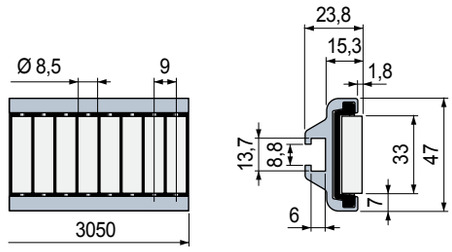

Cylinder rollers material	Code	Weight kg
Polyethylene PE (white)	**645083**	1,20

- Material: metal profile in anodized aluminium, rollers module in acetal POM (black), roller pins in stainless steel.
- Standard packaging: strands 3,05 metres.
- Packaging: 2 strands.

Cylinder roller module

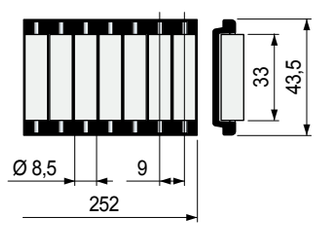

Code	Cylinder rollers material	Code
607933	Polyethylene PE (white)	**644613**
607943		

- **Characteristics** Part. S0757
  - Self supporting structure.
  - Anodized aluminium profile.
  - Quick and easy installation by standard bolts.
  - Can be used straight running and sideflexing.

- **Assembly** Part. S0757

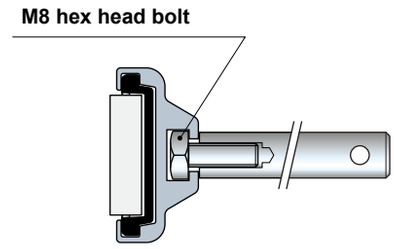

- **Accessories**
  Part. S0369 - Connecting bar

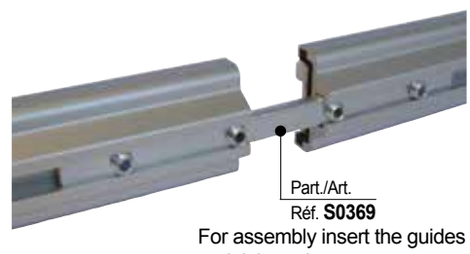

For assembly insert the guides and tighten the set screw.

- **Min. curvature radius** Part. S0757

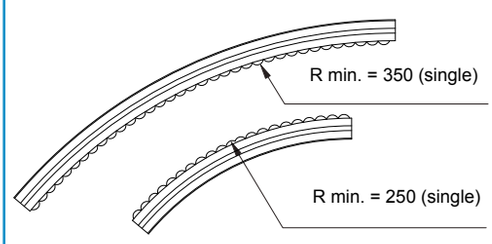

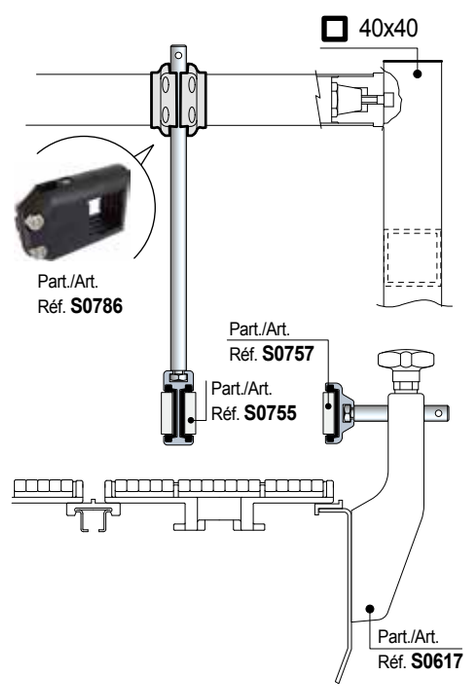

REXNORD

Part. S0755

- **Characteristics** Part. S0755
  - Self supporting structure.
  - Anodized aluminium profile.
  - Quick and easy installation by standard bolts.
  - Can be used straight running and sideflexing.

- **Assembly** Part. S0755

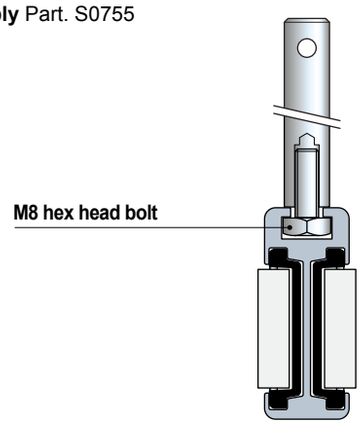

- **Accessories**
  Part. S0369 - Connecting bar

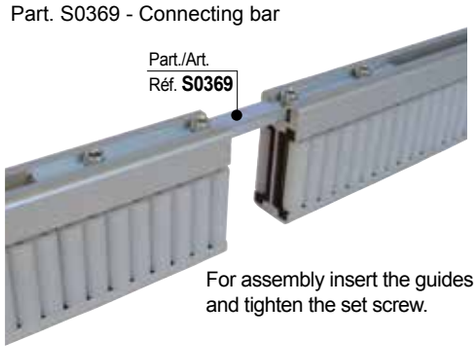

For assembly insert the guides and tighten the set screw.

- **Min. curvature radius** Part. S0755

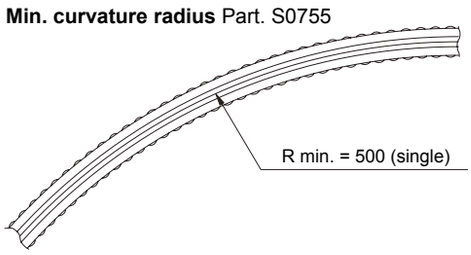

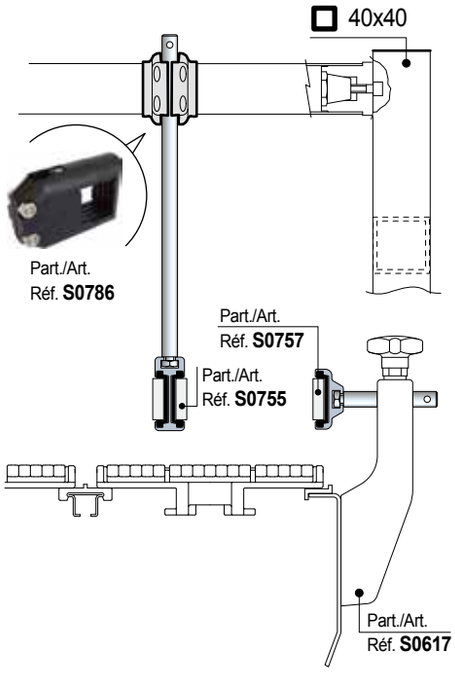

Centre guide with cylinder rollers

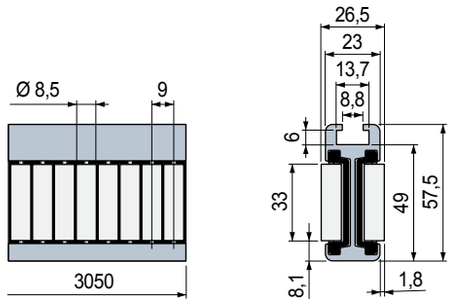

Cylinder rollers material	Code	Weight kg
Polyethylene PE (white)	**645103**	1,75

- Material: metal profile in anodized aluminium, rollers module in acetal POM (black), roller pins in stainless steel.
- Standard packaging: strands 3,05 metres.
- Packaging: 2 strands.

Cylinder roller module

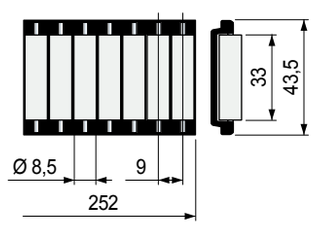

Cylinder rollers material	Code
Polyethylene PE (white)	**644613**

Part. S0757

Roller side guides with cylinder rollers

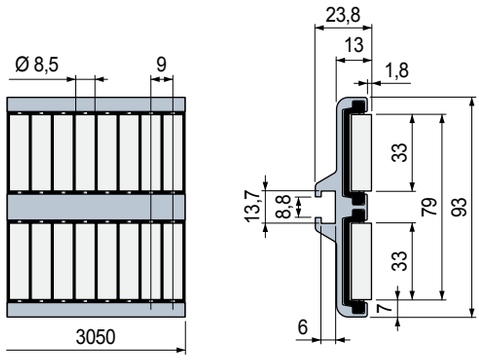

Cylinder rollers material	Code	Weight kg
Polyethylene PE (white)	**645093**	2,00

- Material: metal profile in anodized aluminium, rollers module in acetal POM (black), roller pins in stainless steel.
- Standard packaging: strands 3,05 metres.
- Packaging: 2 strands.

Cylinder roller module

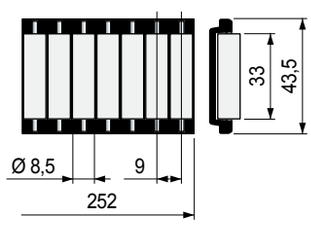

Cylinder rollers material	Code
Polyethylene PE (white)	**644613**

- **Characteristics** Part. S0757
  - Self supporting structure.
  - Anodized aluminium profile.
  - Quick and easy installation by standard bolts.
  - Can be used straight running and sideflexing.

- **Assembly** Part. S0757

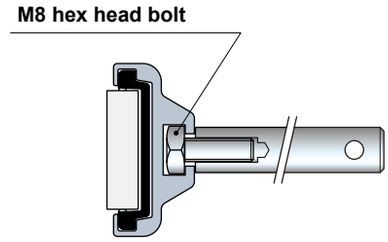

- **Accessories**
  Part. S0369 - Connecting bar

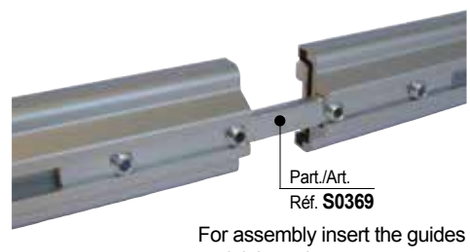

For assembly insert the guides and tighten the set screw.

- **Min. curvature radius** Part. S0757

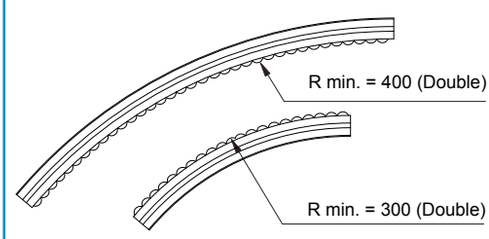

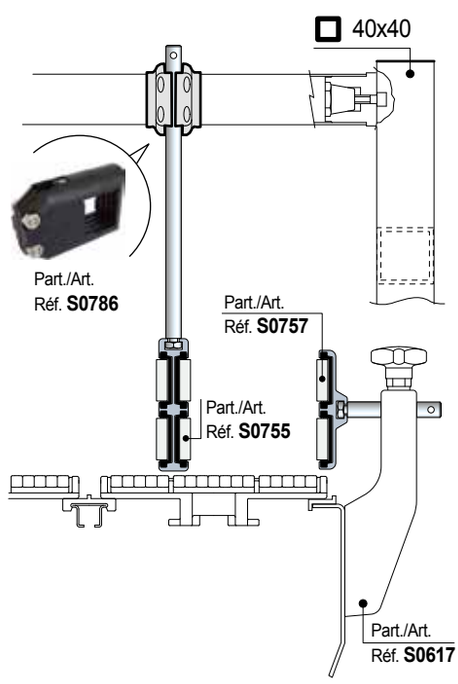

REXNORD

Part. S0755

• Characteristics Part. S0755
- Self supporting structure.
- Anodized aluminium profile.
- Quick and easy installation by standard bolts.
- Can be used straight running and sideflexing.

• Assembly Part. S0755

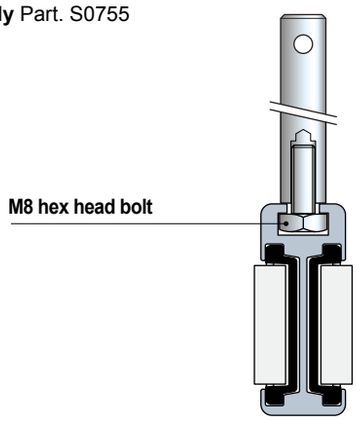

• Accessories
Part. S0369 - Connecting bar

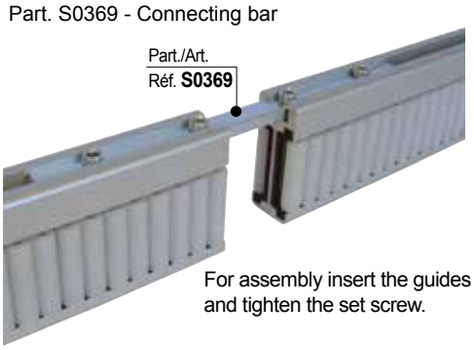

For assembly insert the guides and tighten the set screw.

• Min. curvature radius Part. S0755

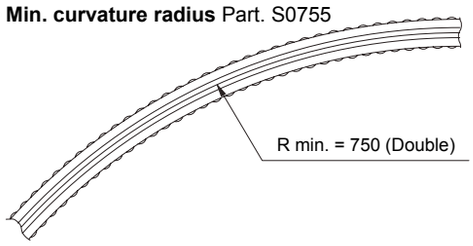

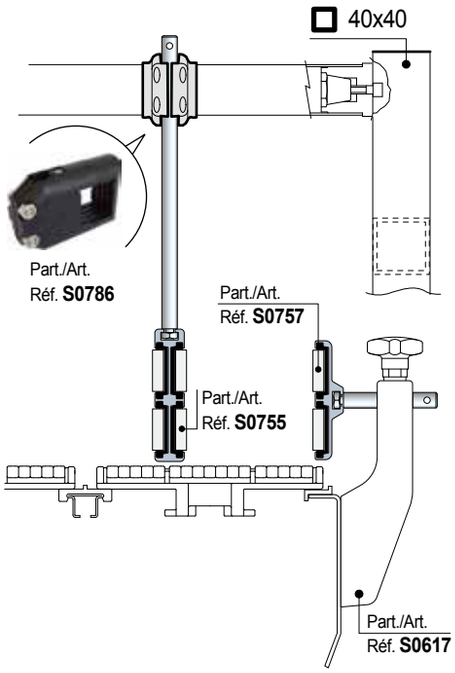

Centre guide with cylinder rollers

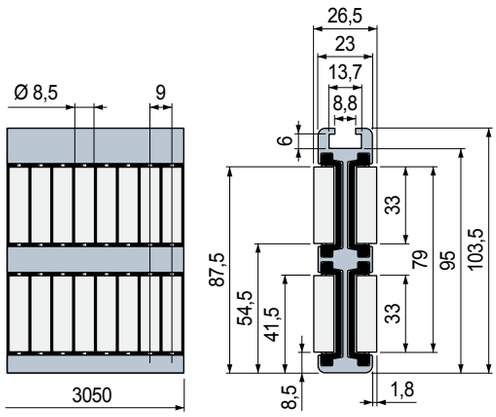

Cylinder rollers material	Code	Weight kg
Polyethylene PE (white)	**645113**	3,00

- Material: metal profile in anodized aluminium, rollers module in acetal POM (black), roller pins in stainless steel.
- Standard packaging: strands 3,05 metres.
- Packaging: 2 strands.

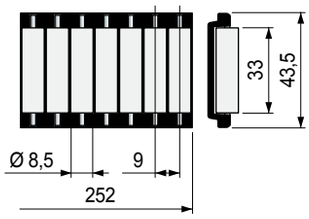

Cylinder rollers material	Code
Polyethylene PE (white)	**644613**

Part. S0868

Roller side guides with cylinder rollers

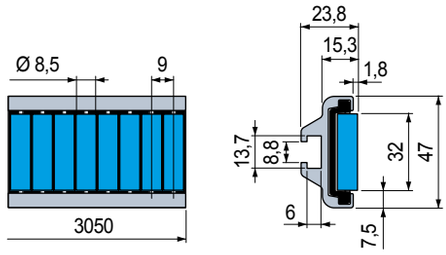

Cylinder rollers material	Code	Weight kg
SEBS rubber (Blue)	**647573**	1,20

- Material: metal profile in anodized aluminium, rollers module in acetal POM (black), roller pins in stainless steel.
- Standard packaging: strands 3,05 metres.
- Packaging: 2 strands.

• **Characteristics** Part. S0868
- Self supporting structure.
- Anodized aluminium profile.
- Quick and easy installation by standard bolts.
- Can be used straight running and sideflexing.

• **Assembly** Part. S0868

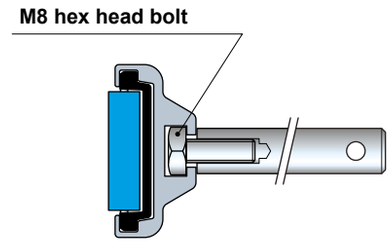

• **Accessories**
Part. S0369 - Connecting bar

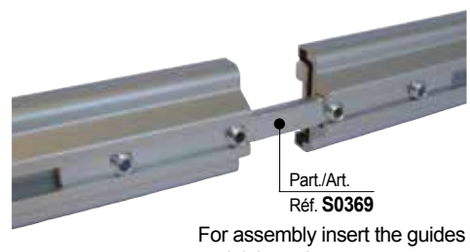

For assembly insert the guides and tighten the set screw.

• **Min. curvature radius** Part. S0868

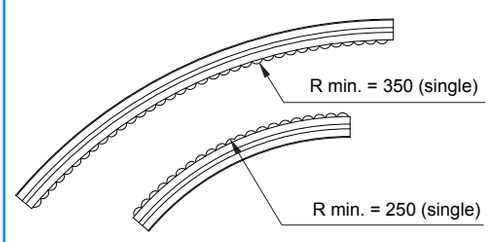

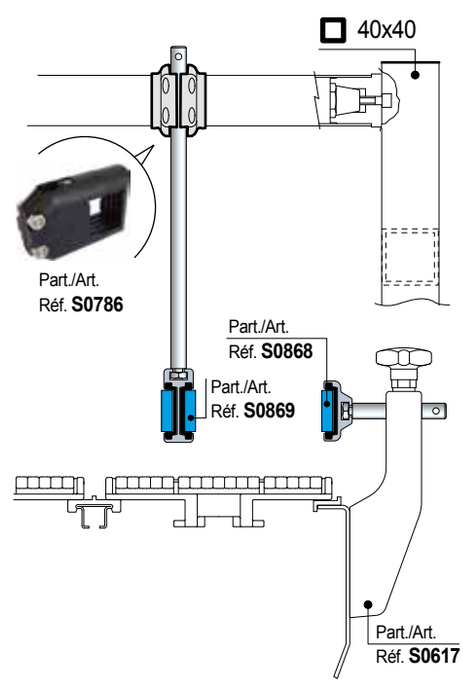

REXNORD

- **Characteristics** Part. S0869
  - Self supporting structure.
  - Anodized aluminium profile.
  - Quick and easy installation by standard bolts.
  - Can be used straight running and sideflexing.

- **Assembly** Part. S0869

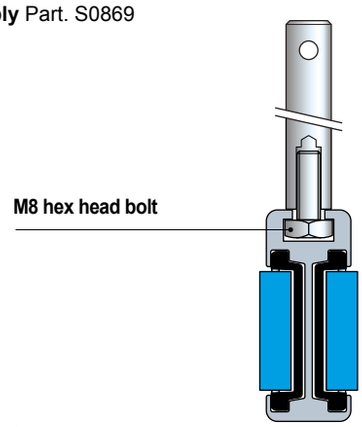

- **Accessories**
  Part. S0369 - Connecting bar

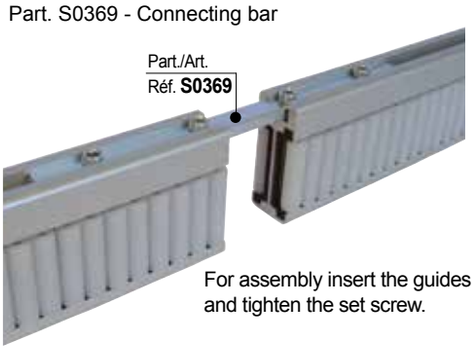

- **Min. curvature radius** Part. S0869

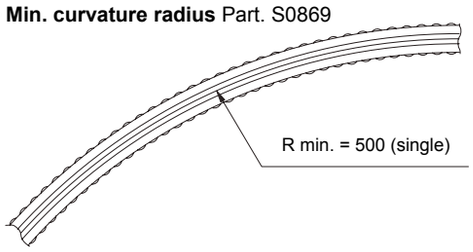

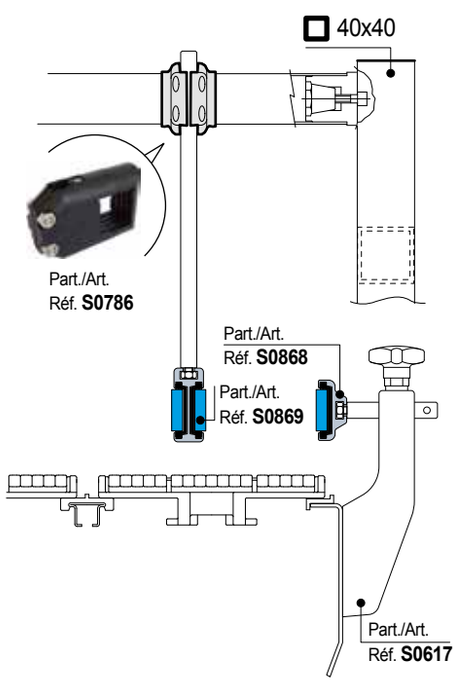

Centre guide with cylinder rollers

Part. S0869

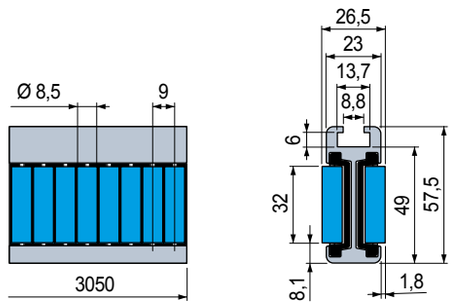

Cylinder rollers material	Code	Weight kg
SEBS rubber (Blue)	**647583**	1,75

- Material: metal profile in anodized aluminium, rollers module in acetal POM (black), roller pins in stainless steel.
- Standard packaging: strands 3,05 metres.
- Packaging: 2 strands.

Part. S0868

Roller side guides with cylinder rollers

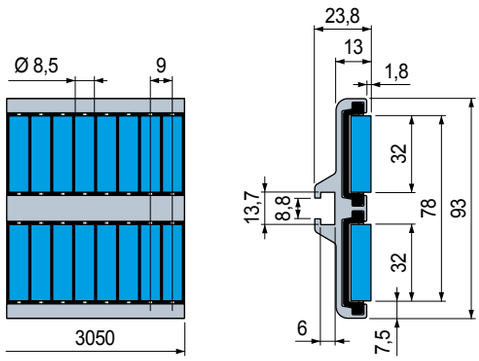

Cylinder rollers material	Code	Weight kg
SEBS rubber (blue)	**647593**	2,00

- Material: metal profile in anodized aluminium, rollers module in acetal POM (black), roller pins in stainless steel.
- Standard packaging: strands 3,05 metres.
- Packaging: 2 strands.

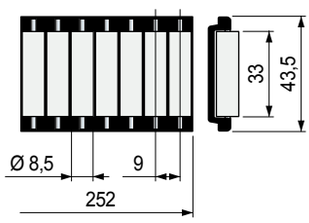

Cylinder rollers material	Code
Polyethylene PE (white)	**644623**

- **Characteristics** Part. S0868
  - Self supporting structure.
  - Anodized aluminium profile.
  - Quick and easy installation by standard bolts.
  - Can be used straight running and sideflexing.

- **Assembly** Part. S0868

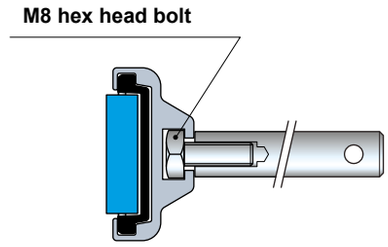

- **Accessories**
  Part. S0369 - Connecting bar

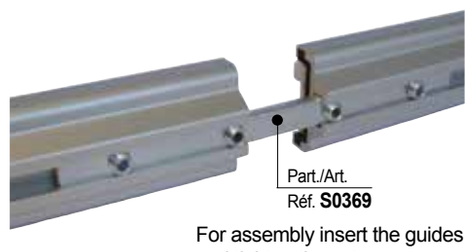

For assembly insert the guides and tighten the set screw.

- **Min. curvature radius** Part. S0868

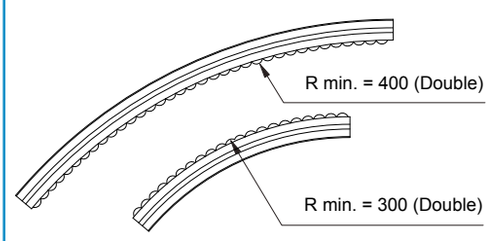

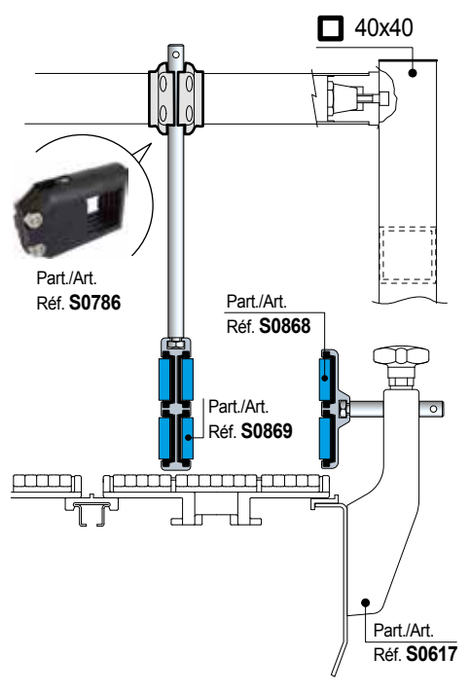

REXNORD

- **Characteristics** Part. S0869
  - Self supporting structure.
  - Anodized aluminium profile.
  - Quick and easy installation by standard bolts.
  - Can be used straight running and sideflexing.

- **Assembly** Part. S0869

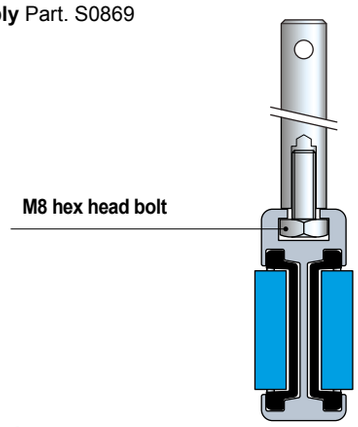

- **Accessories**
  Part. S0369 - Connecting bar

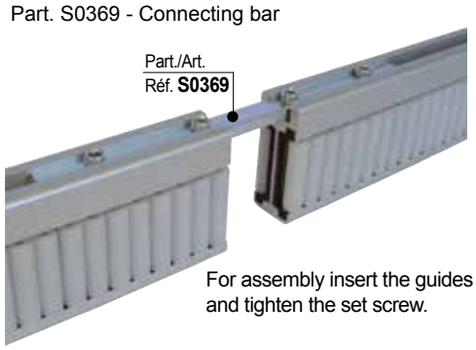

For assembly insert the guides and tighten the set screw.

- **Min. curvature radius** Part. S0869

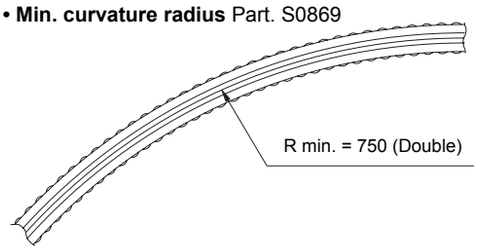

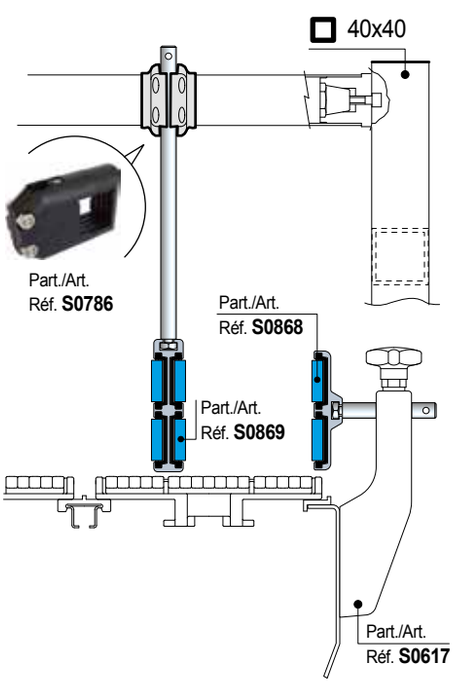

Centre guide with cylinder rollers

Part. S0869

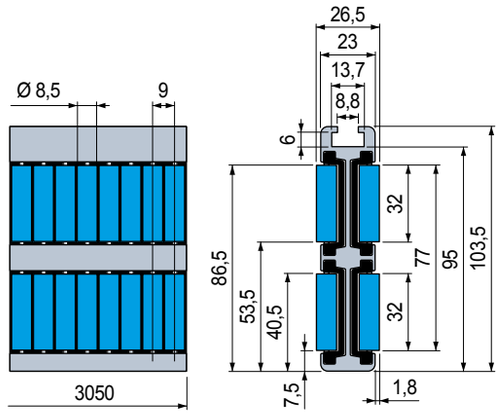

Cylinder rollers material	Code	Weight kg
SEBS rubber (blue)	**647603**	3,00

- Material: metal profile in anodized aluminium, rollers module in acetal POM (black), roller pins in stainless steel.
- Standard packaging: strands 3,05 metres.
- Packaging: 2 strands.

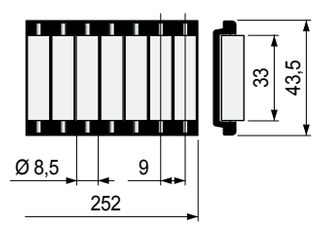

Cylinder rollers material	Code
Polyethylene PE (white)	**644623**

Part. S0756

Pearl roller side guide

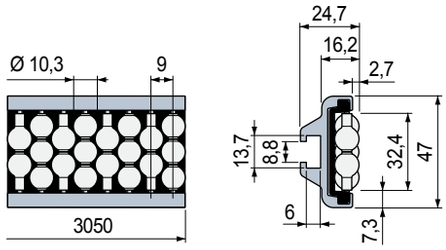

Pearl material	Code	Weight kg
Polyethylene PE (Aubergine)	**645123**	1,15
Polyethylene PE (white)	**645133**	

- Material: metal profile in anodized aluminium, rollers module in acetal POM (black), roller pins in stainless steel.
- Standard packaging: strands 3,05 metres.
- Packaging: 2 strands.

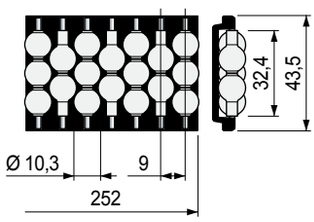

Pearl material	Code
Polyethylene PE (Aubergine)	**644653**
Polyethylene PE (white)	**644633**

- **Characteristics** Part. S0756
  - Self supporting structure.
  - Anodized aluminium profile.
  - Quick and easy installation by standard bolts.
  - Can be used straight running and sideflexing.

- **Assembly** Part. S0756

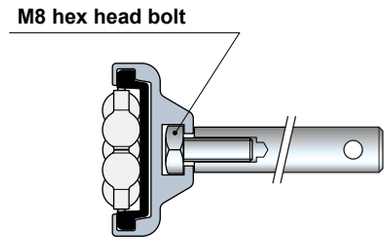

- **Accessories**
  Part. S0369 - Connecting bar

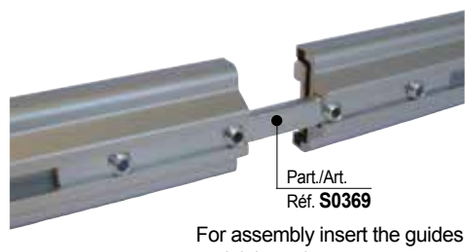

For assembly insert the guides and tighten the set screw.

- **Min. curvature radius** Part. S0756

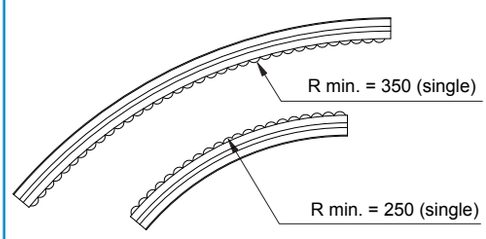

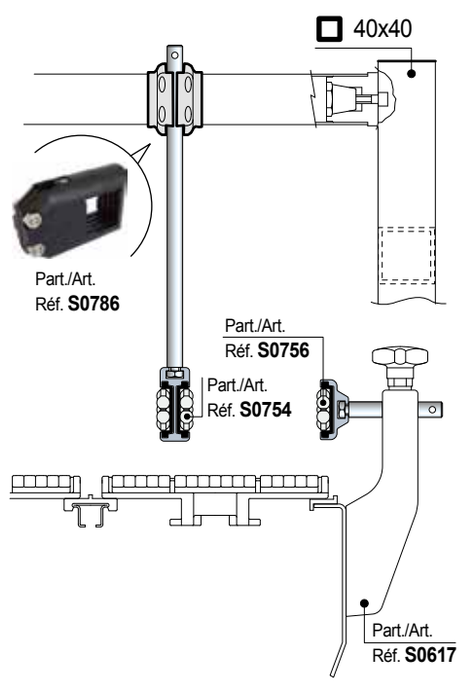

REXNORD

Pearls roller centre guide

Part. S0754

- **Characteristics** Part. S0754
  - Self supporting structure.
  - Anodized aluminium profile.
  - Quick and easy installation by standard bolts.
  - Can be used straight running and sideflexing.

- **Assembly** Part. S0754

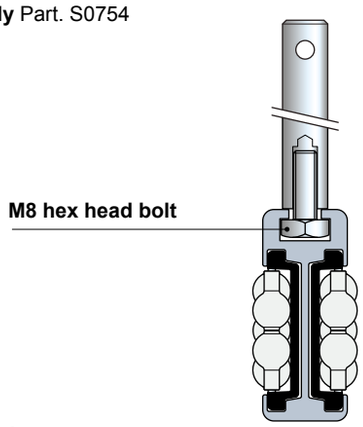

- **Accessories**
  Part. S0369 - Connecting bar

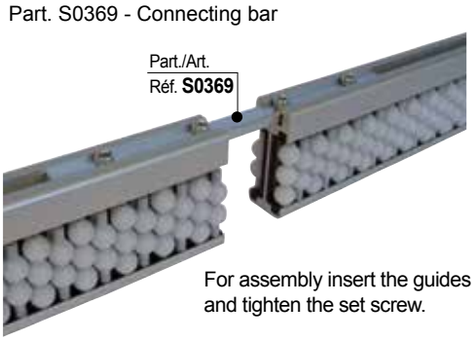

For assembly insert the guides and tighten the set screw.

- **Min. curvature radius** Part. S0754

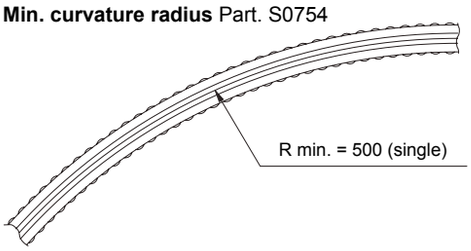

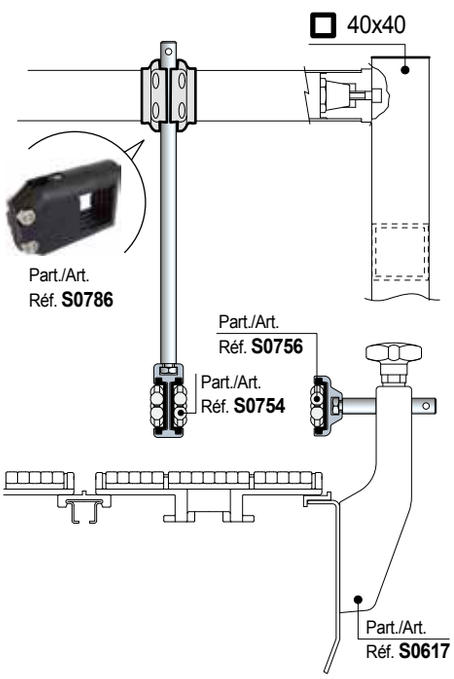

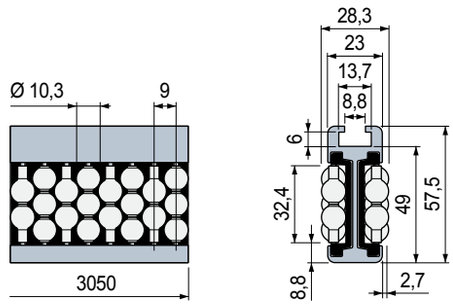

Pearl material	Code	Weight kg
Polyethylene PE (white)	**645173**	1,70

- Material: metal profile in anodized aluminium, rollers module in acetal POM (black), roller pins in stainless steel.
- Standard packaging: strands 3,05 metres.
- Packaging: 2 strands.

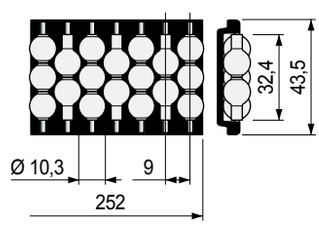

Pearl material	Code
Polyethylene PE (Aubergine)	**644653**
Polyethylene PE (white)	**644633**

Part. S0756

Pearl roller side guide

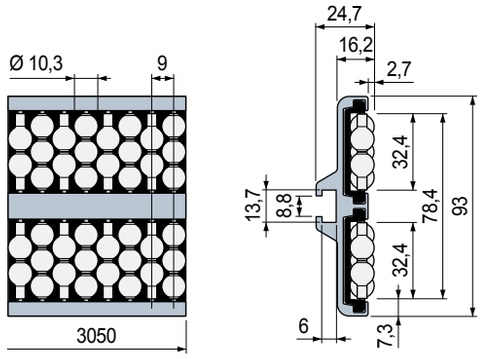

Pearl material	Code	Weight kg
Polyethylene PE (Aubergine)	**645143**	1,95
Polyethylene PE (white)	**645153**	

- Material: metal profile in anodized aluminium, rollers module in acetal POM (black), roller pins in stainless steel.
- Standard packaging: strands 3,05 metres.
- Packaging: 2 strands.

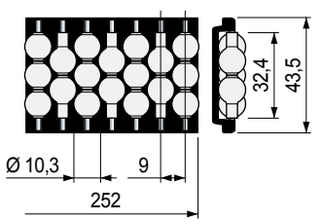

Pearl material	Code
Polyethylene PE (Aubergine)	**644653**
Polyethylene PE (white)	**644633**

- **Characteristics** Part. S0756
  - Self supporting structure.
  - Anodized aluminium profile.
  - Quick and easy installation by standard bolts.
  - Can be used straight running and sideflexing.

- **Assembly** Part. S0756

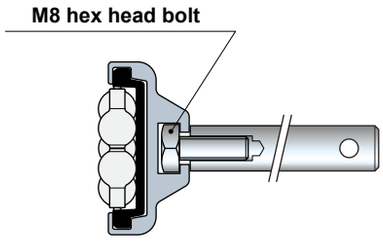

- **Accessories**
  Part. S0369 - Connecting bar

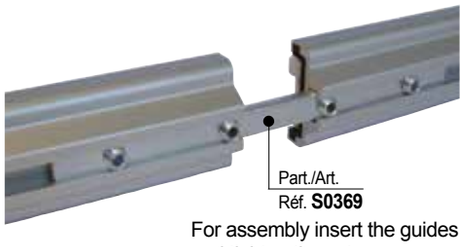

For assembly insert the guides and tighten the set screw.

- **Min. curvature radius** Part. S0756

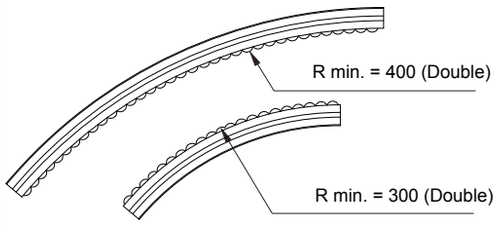

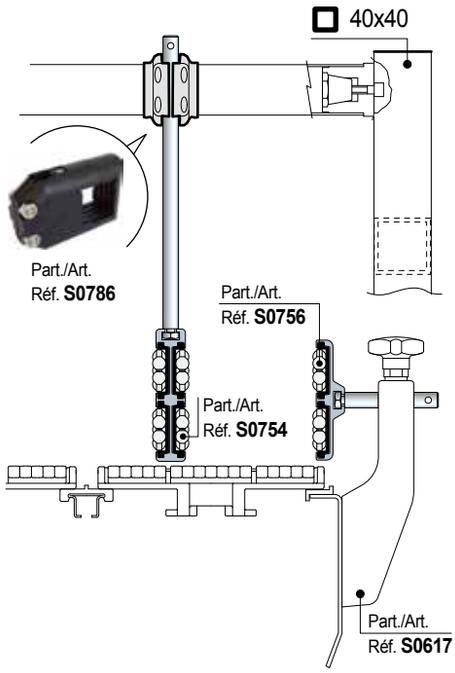

Notes

www.rexnord.com

Please contact our Application Engineers at +31 174 445 111 for assistance with product selection.

38716.Rexnord Catalog Marbett_4 - ENG S043-S085 blauw_v9.indd 77 18-09-18 08:12

Part. S0856

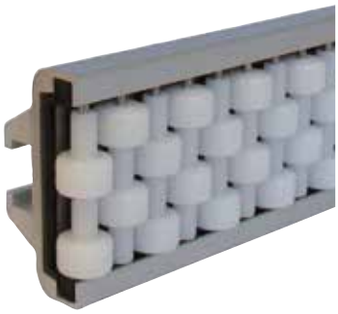

Roller side guides

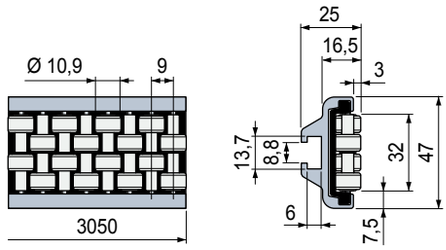

Rollers material	Code	Weight kg
Acetal POM (white)	**645203**	1,20

- Material: metal profile in anodized aluminium, rollers module in acetal POM (black), roller pins in stainless steel.
- Standard packaging: strands 3,05 metres.
- Packaging: 2 strands.

• **Characteristics** Part. S0856
- Self supporting structure.
- Anodized aluminium profile.
- Quick and easy installation by standard bolts.
- Can be used straight running and sideflexing.

• **Assembly** Part. S0856

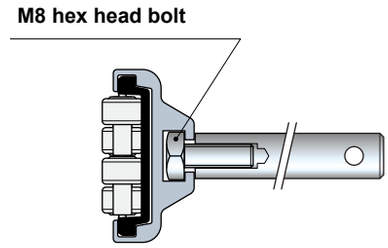

• **Accessories**
Part. S0369 - Connecting bar

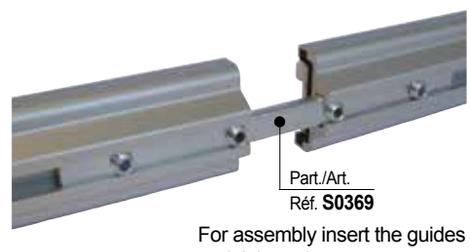

For assembly insert the guides and tighten the set screw.

• **Min. curvature radius** Part. S0856

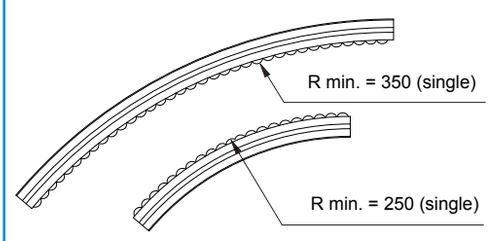

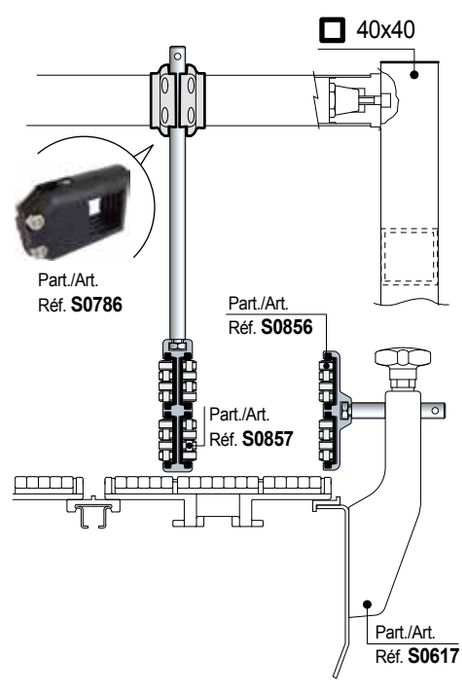

REXNORD

Roller centre guides

Part. S0857

- **Characteristics** Part. S0857
  - Self supporting structure.
  - Anodized aluminium profile.
  - Quick and easy installation by standard bolts.
  - Can be used straight running and sideflexing.

- **Assembly** Part. S0857

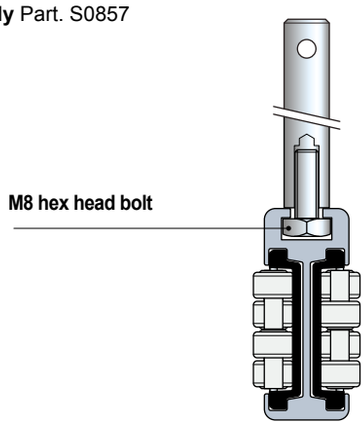

- **Accessories**
  Part. S0369 - Connecting bar

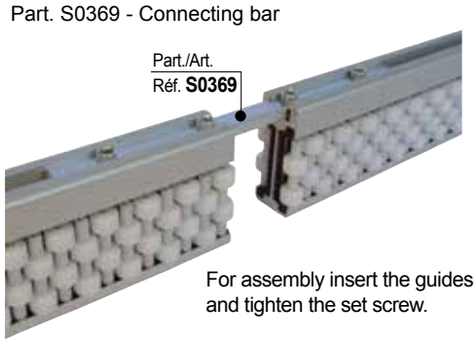

For assembly insert the guides and tighten the set screw.

- **Min. curvature radius** Part. S0857

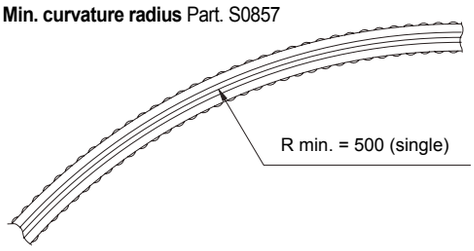

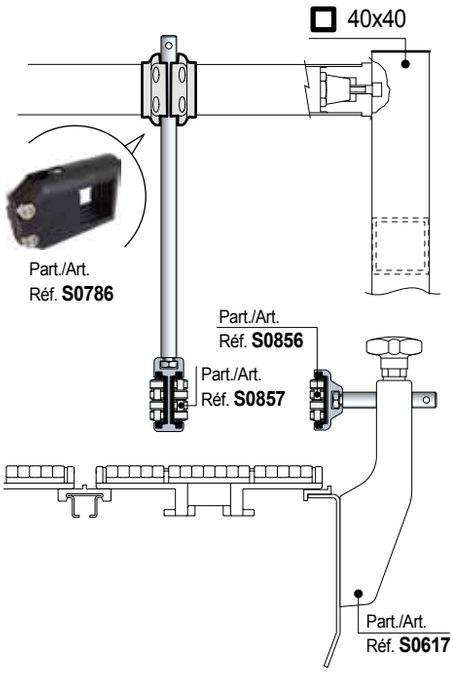

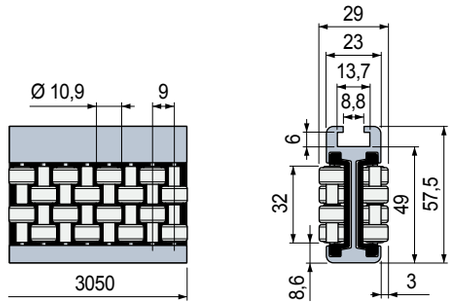

Rollers material	Code	Weight kg
Acetal POM (white)	**645223**	1,75

- Material: metal profile in anodized aluminium, rollers module in acetal POM (black), roller pins in stainless steel.
- Standard packaging: strands 3,05 metres.
- Packaging: 2 strands.

Part. S0760

Side separation block

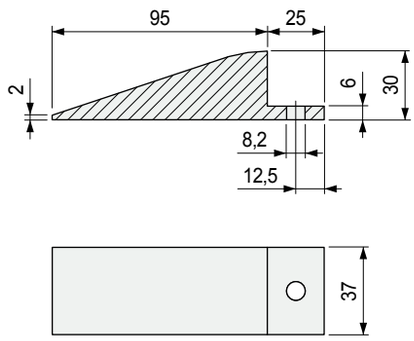

Code	Weight kg
613433	0,05

- Material: separation block in Polyethylene PE (white), bolt in austenitic stainless steel.
- Packaging: 2 pieces.

• **Assembly** Part. S0760

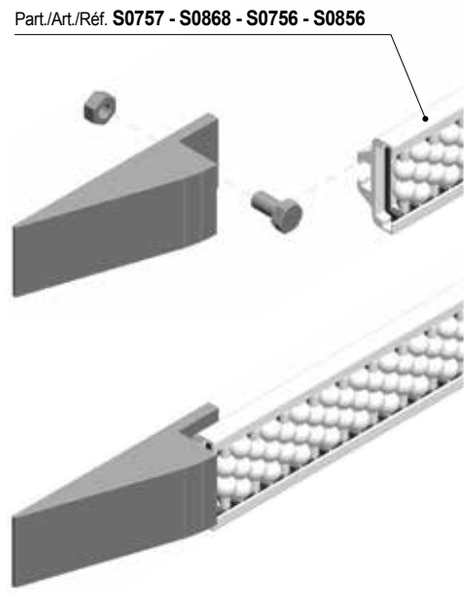

• **Assembly** Part. S0852

Part./Art./Réf. **S0757 - S0755 - S0868 - S0869**
S0756 - S0754 - S0856 - S0857 - S0656

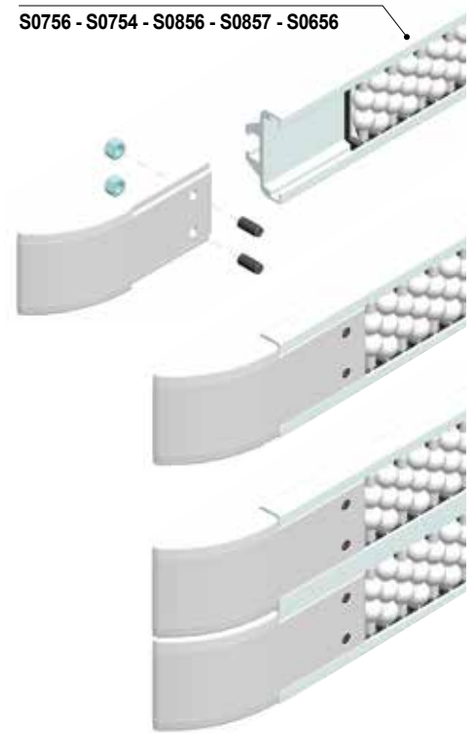

Side separation block

Part. S0852

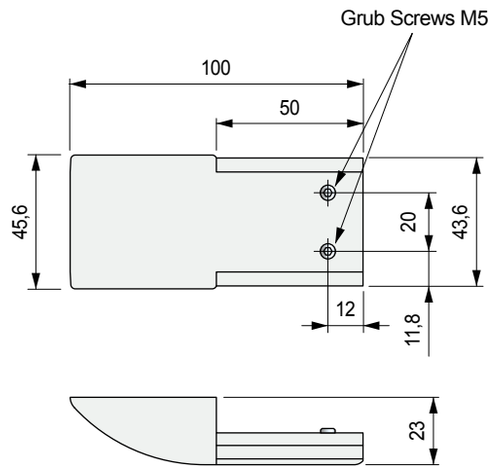

Code	Weight kg
646633	0,05

- Material: separation block in Acetal POM (white), nuts in nickel plated brass, grub screws in stainless steel.
- Packaging: 4 pieces.

• **Assembly** Part. S0854

Part./Art./Réf. **S0757 - S0755 - S0868 - S0869**
S0756 - S0754 - S0856 - S0857 - S0656

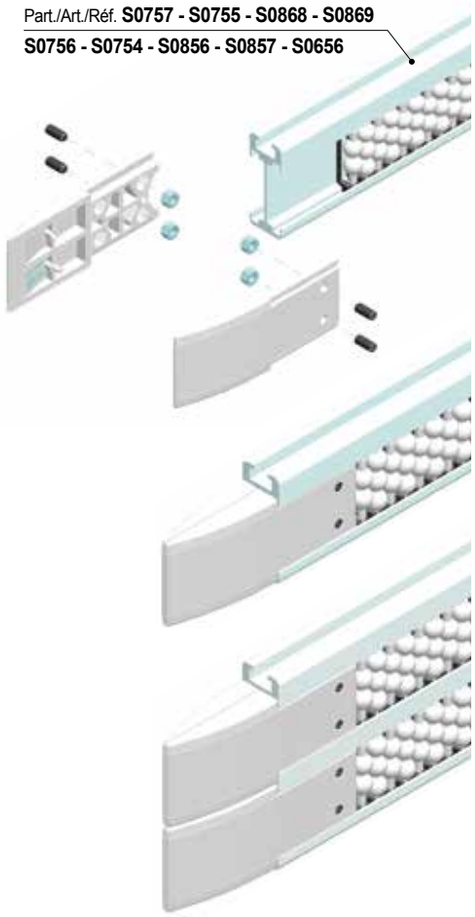

Centre separation block

Part. S0854

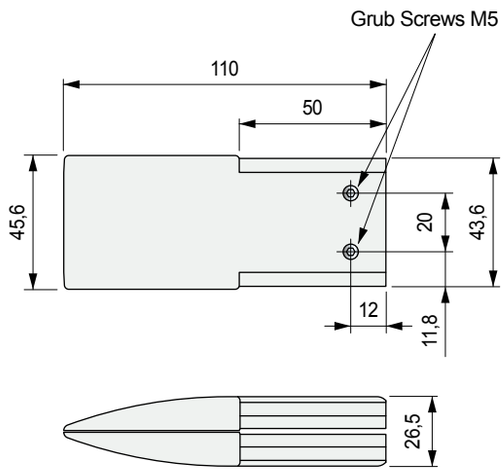

Code	Weight kg
646643	0,09

- Material: separation block in Acetal POM (white), nuts in nickel plated brass, grub screws in stainless steel.
- Packaging: 4 pairs.

Part. S0128S

Sideflexing

Roller side guides

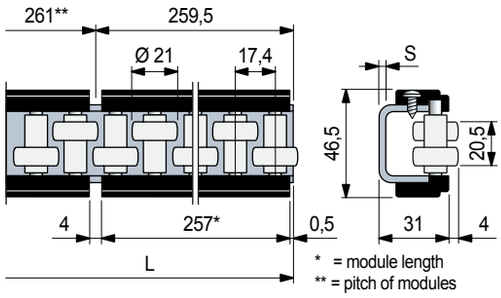

Part. S0128

Straight run

S mm	L mm	Metal profile and screws material	Code	Weight kg/m
Part. S0128S Sideflexing				
2	3129	Zinc plated steel	**6346600**	2,06
Part. S0128 Straight run				
3	1041	Zinc plated steel	**64531**	2,6
	2085	Zinc plated steel	**64541**	
	3129	Zinc plated steel	**64551**	
		Austenitic stainless steel	**63350**	

- Material: rollers in acetal POM (white).
  Side straps in polyamide PA (black).
  Roller pins in ferritic stainless steel.
- Packaging: 2 strands.
- Accessories:

Guide - Rail Clamps.

- **Use** of Part. S0128S - S0128
  Rugged containers (ex. cases, cartons).

- **Modular system**
  Guides are made of 257 mm long modules fixed on a metal "C" profile.

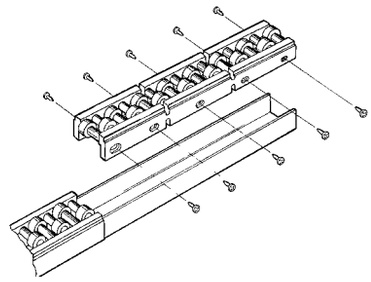

- **Min. curvature radius** (only for Part. S0128S)

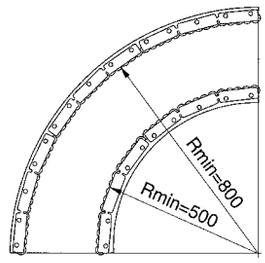

External curve

Internal curve

Curving procedure
- Disassemble the modules
- Curve the metal profile using the manual bending machine.
- Reassemble the modules (the flexibility of the side straps make them easily adaptable to the curved profile).

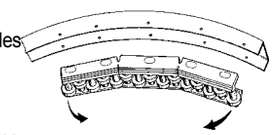

Part. S0128

Straight run

Roller side guides

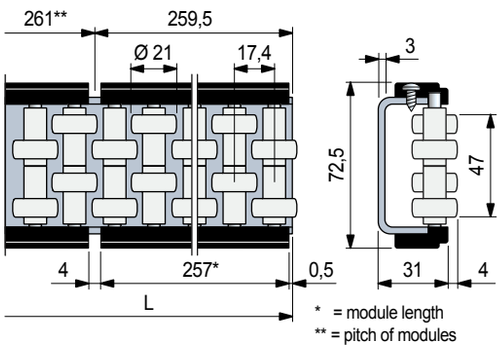

L mm	Metal profile and screws material	Code	Weight kg/m
1041	Zinc plated steel	**64501**	3,8
3129	Austenitic stainless steel	**63340**	

- Material: rollers in acetal POM (white).
  Side straps in polyamide PA (black).
  Roller pins in ferritic stainless steel.
- Packaging: 2 strands.
- Accessories:

Guide - Rail Clamps.

- **Deflection of** Part. S0128S - S0128

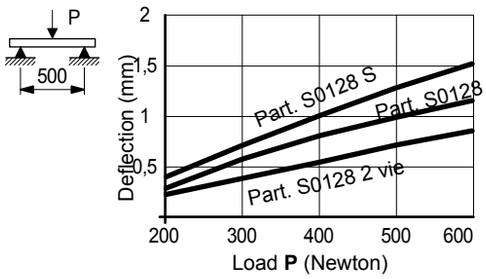

- **Use** of Part. S0128
  Rugged containers (ex. cases, cartons).

- **Modular system** Part. S0128
  Guides are made of 257 mm long modules fixed on a metal "C" profile.

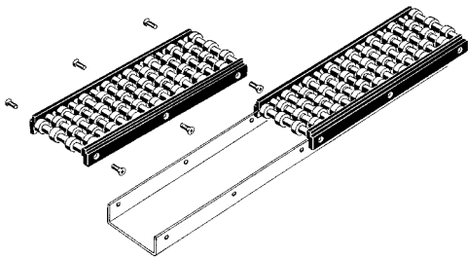

- **Use** of Part. S0128
  Rugged containers (ex. cases, cartons).

- **Modular system**
  Guides are made of 257 mm long modules fixed on a metal “C” profile.

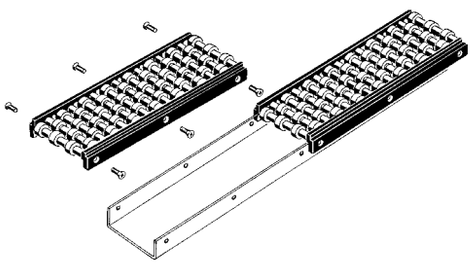

- **Deflection of** Part. S0128

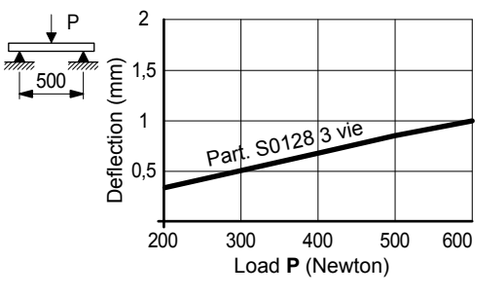

Roller side guides

Part. S0128

Straight run

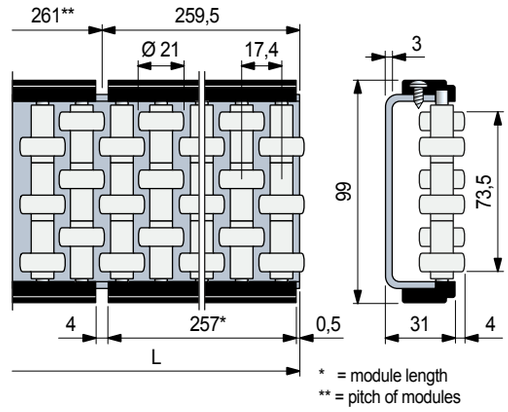

L mm	Metal profile and screws material	Code	Weight kg/m
1041	Austenitic stainless steel	**62660**	5,0
2085	Austenitic stainless steel	**62690**	
3129	Zinc plated steel	**64491**	
	Austenitic stainless steel	**62890**	

- Material: rollers in acetal POM (white).
  Side straps in polyamide PA (black).
  Roller pins in ferritic stainless steel.
- Packaging: 2 strands.
- Accessories:

Guide - Rail Clamps.

Rollers

Part. S0063

Part. S0063

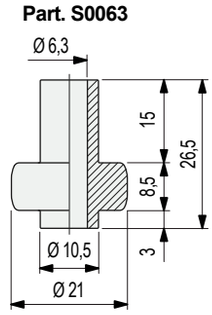

Code
S006351370

- Material: acetal POM (white).
- Packaging: Part. S0063 (500 pieces),
- Part. S0063 can be used as spare part in roller guides Part. S0128-S0128 S-S0628 S.

Notes

REXNORD

• Bending procedure

1 - Calculate the length of the section to be bent L.

L = R • K R = bend radius.
K = bend coefficient.

bend angle (degrees)	30°	60°	90°	120°	150°	180°
bend coefficient K	0,5	1	1,5	2	2,5	3

2 - Sign the length L on the profile to be bent, with (X) starting point, (Z) end point and (Y) middle point. Acting on handle (M), displace roller (1) to contact the profile

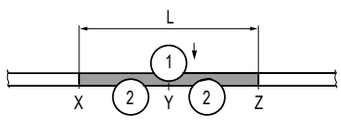

3 - Acting on handle (M), adjust the displacement to obtain the right radius (more displacement, smaller radius). Acting on handle (N), rollers (2) rotate and move the profile to position X (picture A) or Z (picture B).
To obtain the desired radius it is necessary a minimum of two shifts.
To get a seamless transition from straight section to curve section and vice-versa it is necessary to exceed points X and Z by 20 mm.

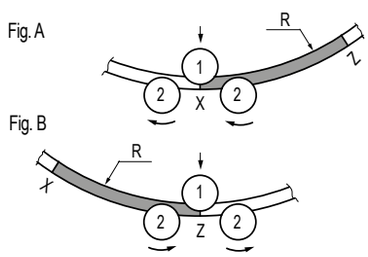

Guide rail bending machine (manual)

Part. S0218

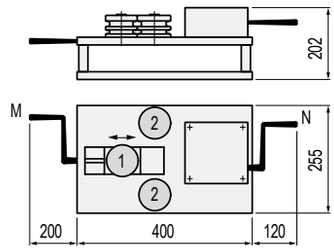

Code	Weight kg
60151	23

- Functioning: manual.
- Packaging: 1 bending machine.

- The bending machine is made with 3 shafts for rollers, hand driven.
  Handle (M), displaces roller (1), to determine the bending radius.
  Handle (N), actions the rotation of rollers (2).

- The rollers are supplied as separate accessories.
  Each type of guide needs specific rollers, according to the table below. Double groove rollers allow two profiles bending at one time.

- Both internal and external bends can be made.

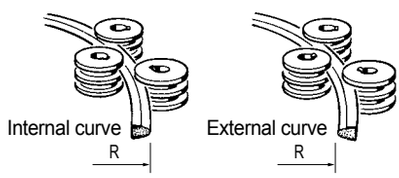

Guide - Rail Clamps for
- Part. S0223
- Part. S0317
- Part. S0219
- Part. S0273
- Part. S0308
- Part. S0715
- Part. S0765
- Part. S0767
- Part. S0768
- Part. S0769
- Part. S0770

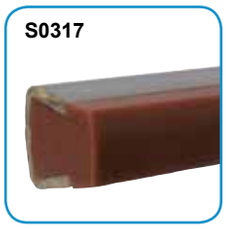

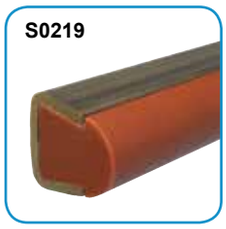

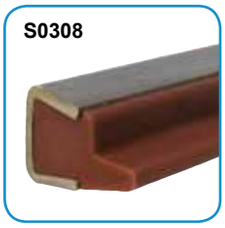

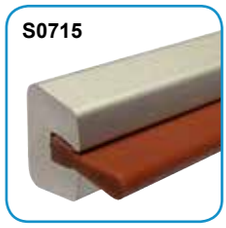

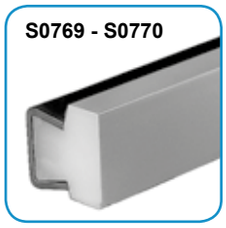

Part. S0210P

Guide rail clamp

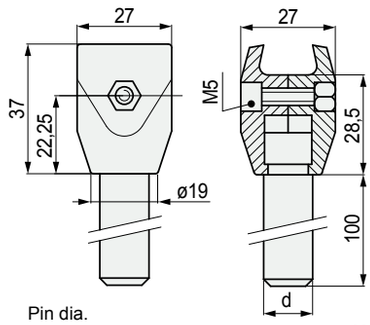

Pin dia. d mm	Code	Weight kg
12	6203910	0,12

- Material: guide rail clamps in reinforced polyamide PA FV (black). Pin in austenitic stainless steel.
  Bolt in austenitic stainless steel.
  Nut in nickel plated brass.
- Packaging: 24 pieces.

- **Swivel pin connection**
  Use for conveyors with (format change).
  They allow an easy regulation of product-guides on corner tracks.

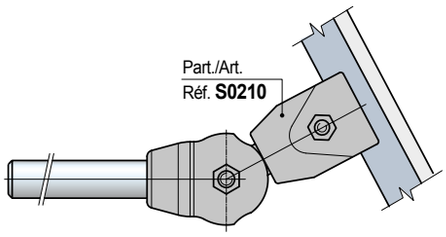

- **Pin dimensions** for Part. S0210

Pin dia. 12 mm

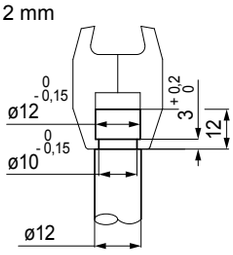

Pin dia. 14 mm

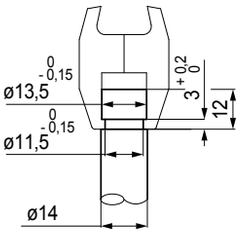

Guide - Rail Clamps

for Part. S0223 - S0317 - S0219 - S0273 - S0308 - S0715 - S0765 - S0767 - S0768 - S0769 - S0770

• **Assembly** of Part. S0275

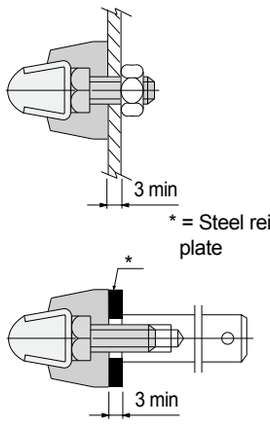

Guide rail clamp

Part. S0275

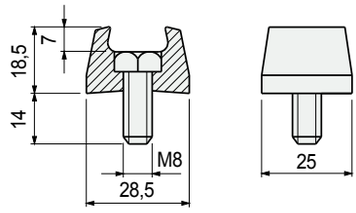

Code	Weight kg
66811	0,02

- Material: guide rail clamps in acetal POM (Black), bolt in austenitic stainless steel.
- Packaging: 50 pieces.

• **Assembly** of Part. S0211
Unlimited height adjustment possible

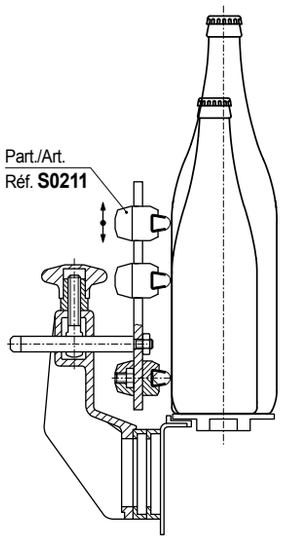

Adjustable guide rail clamp

Part. S0211

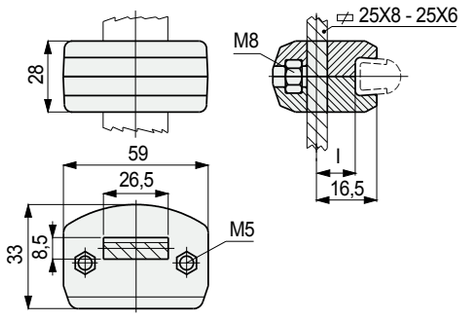

Distance l = 8 mm

l mm	Code	kg
8	**59961**	0,05

- Material: guide rail clamps in reinforced polyamide PA FV (black).
- Bolt in austenitic stainless steel. Nut in nickel plated brass.
- Packaging: 24 pieces.

for Part. S0223 - S0317 - S0219 - S0273 - S0308 - S0715 - S0765 - S0767 - S0768 - S0769 - S0770

Part. S0213

Double guide rail clamp

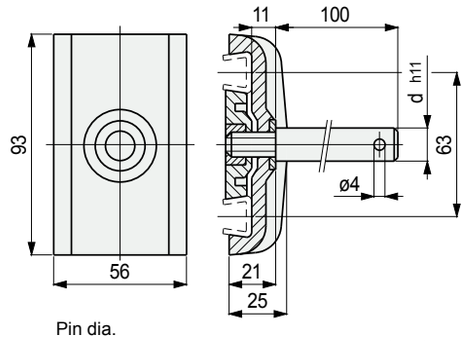

Pin dia. d mm	Code	Weight kg
12	**60091**	0,19

- Material: guide rail clamp in reinforced polyamide PA FV (black).
  Pin in austenitic stainless steel.
  Washer in austenitic stainless steel.
  Nut in nickel plated brass.
- Packaging: 24 pieces.

• **Assembly** of Part. S0213
The plate inside the clamp must be positioned to suit the thickness of the guide.

Position of plate for assembly of guides of thickness s = 1,5.

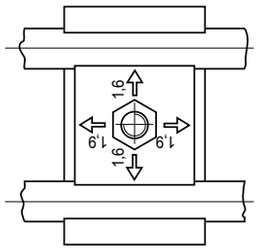

Position of plate for assembly of guides of thickness s = 2.
The plate is turned through 90°.

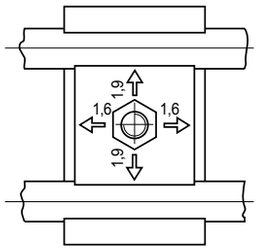

Part. S0213

Double guide rail clamp

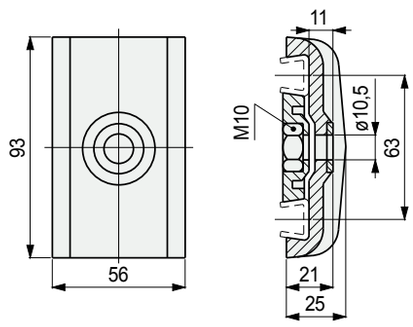

Code	Weight kg
60101	0,08

- Material: guide rail clamp in reinforced polyamide PA FV (black).
  Washer in austenitic stainless steel.
  Nut in nickel plated brass.
- Packaging: 24 pieces.
- Accessories: swivel pin connection Part. S0749 - S0740P.

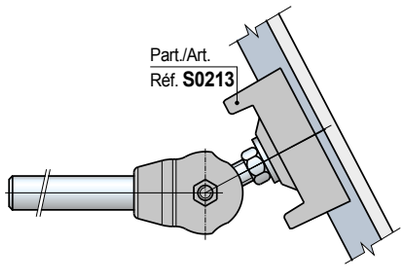

Guide - Rail Clamps

for Part. S0219 - S0273

Part. S0736
Part. S0737

• **Assembly** of Part. S0736
The clamps allows the junction of straight tracks with corner tracks.
Ideal to adjust the length of side guides near the curves when width adjustment is needed.

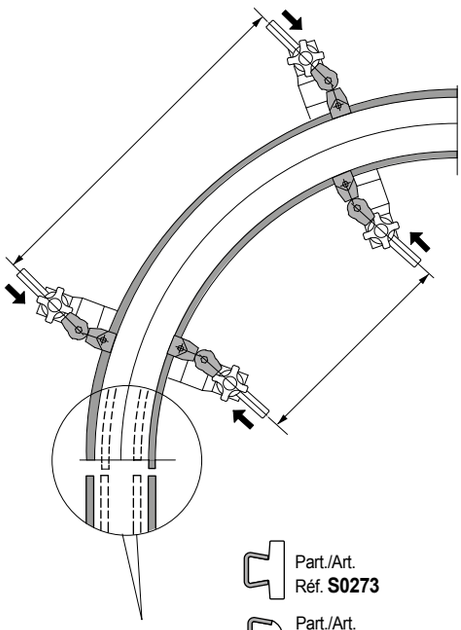

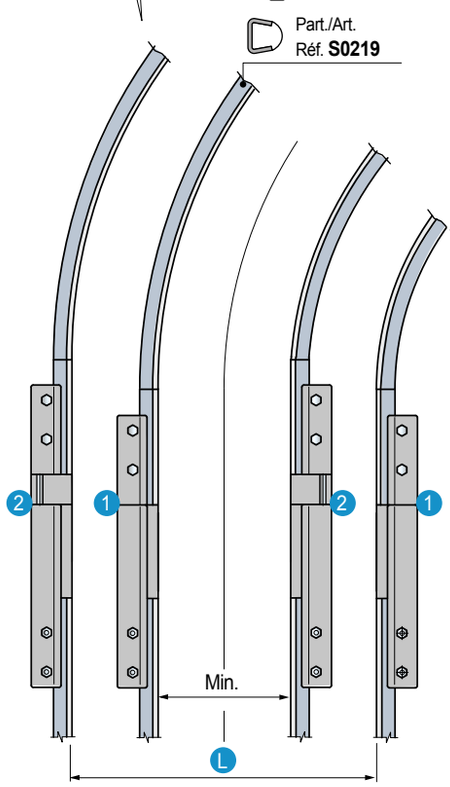

1 - Closed clamp.
2 - Open clamp.
L - Size changing width.

Sliding joint clamp

Clamp fully closed

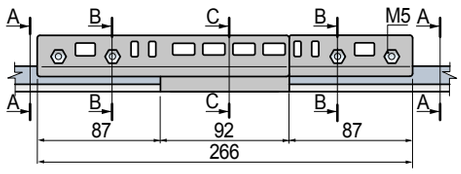

Clamp fully open

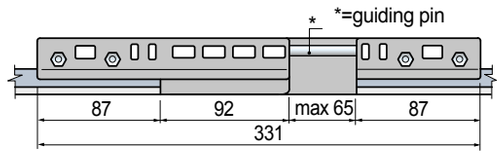

Part. S0736 - Sliding joint clamp for Part. S0219

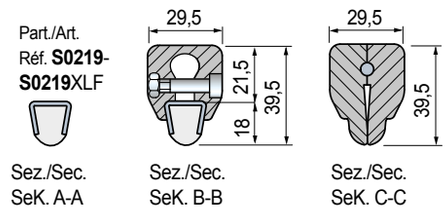

Part. S0737 - Sliding joint clamp for Part. S0273

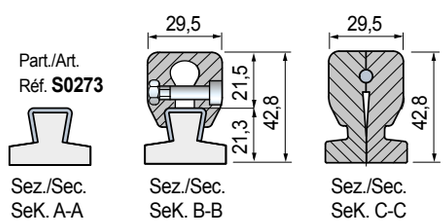

Type of guides to joint	Code	Weight kg
Part. S0219 - S0219XLF	**S0736695402**	0,24
Part. S0273	**S0737695412**	

- Material: clamp in acetal (white).
  Guiding pin in austenitic stainless steel.
  Tightening bolt in austenitic stainless steel.
- Max recommended tightening torque: 0,4 Kgm.
- Packaging: 1 piece.

Guide - Rail Clamps

for Part. S0223 - S0317 - S0219 - S0273 - S0308 - S0715 - S0765 - S0767 - S0768 - S0769 - S0770

Part. S0694

Guide-rail clamp

With two fixing screws

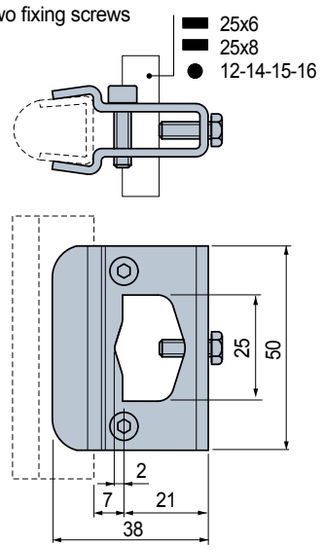

Code	Weight kg
689222	0,10

- Material: clamp and bolt in austenitic stainless steel.
- Packaging: 16 pieces.

• **Assembly** of Part. S0694

Fixing on plates

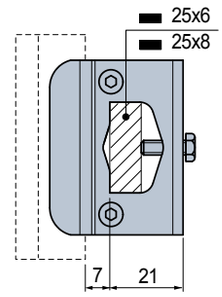

Fixing on rods

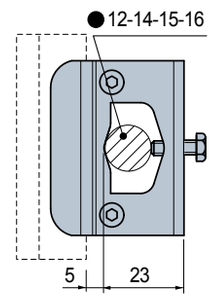

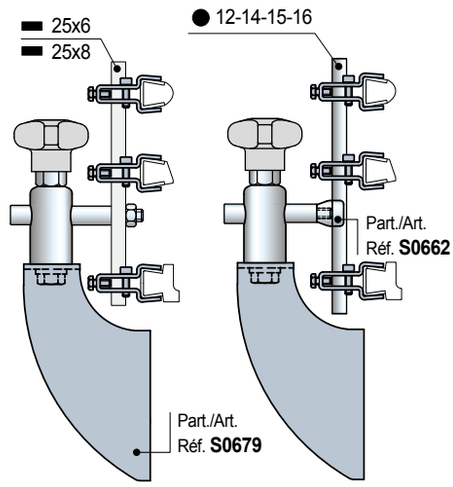

Part. S0217

Guide-rail clamp (double)

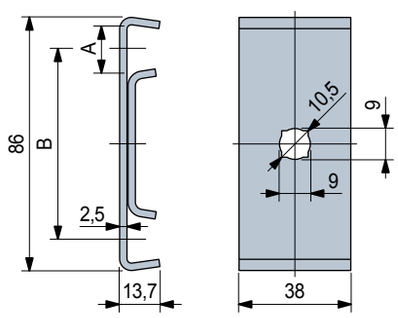

Use	A mm	B mm	Code	Weight kg
For guides width S = 2	17	63,5	**695131**	0,14

- Material: austenitic stainless steel.
- Packaging: 50 pieces.
- Accessories: swivel pin connection Part. S0740 - S0740P.

• **Pin dimensions for** Part. S0217

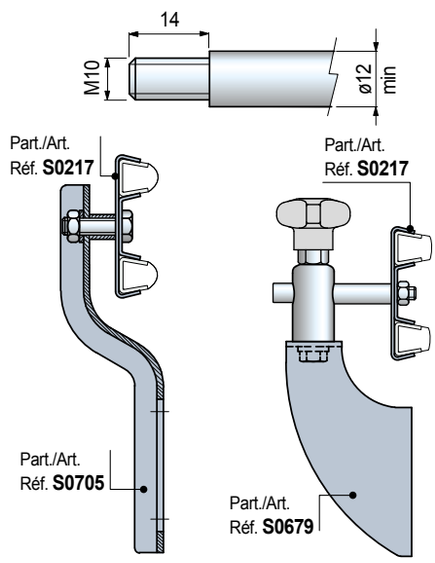

• **Swivel pin connection**
Use for conveyors with (format change).
They allow an easy regulation of product-guides on corner tracks.

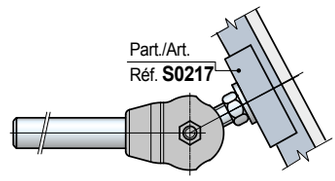

Guide - Rail Clamps

for Part. S0223 - S0317 - S0219 - S0273 - S0308 - S0715 - S0765 - S0767 - S0769 - S0770

• **Assembly** of Part. S0903

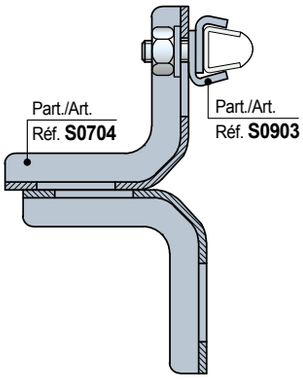

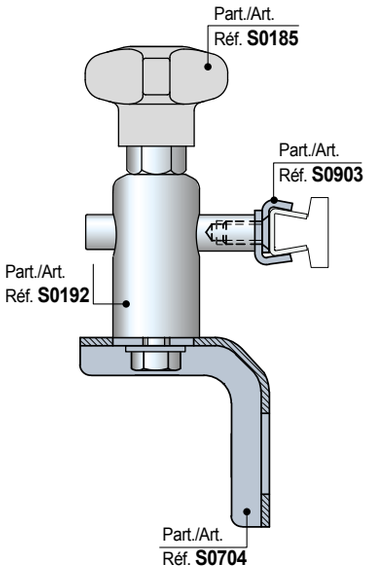

ViseClamp™

Part. S0903

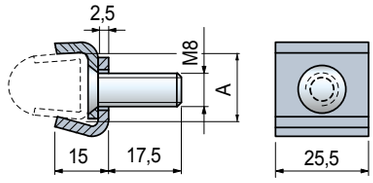

Use	A mm	Code
For guides width S = 2	17	**656001N**

- Material: austenitic stainless steel.
- Packaging: 50 pieces.

• **Assembly** of Part. S0215

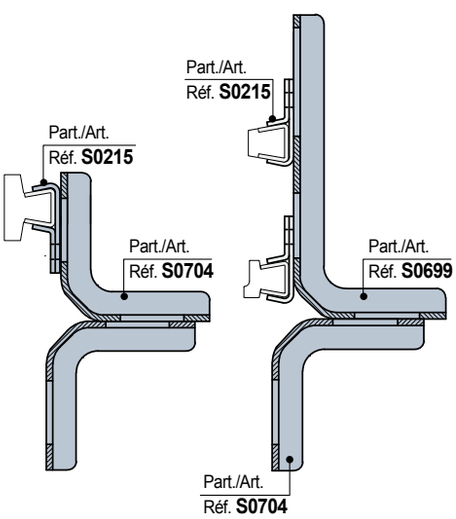

Guide rail clamp

Part. S0215

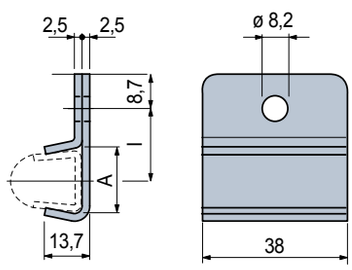

Use	A mm	l mm	Code	Weight kg
For guides width S = 1,5	16	20,5	**60121N**	0,04
For guides width S = 2	17	20	**65976N**	

- Material: austenitic stainless steel.
- Packaging: 50 pieces.

Part. S0237

Adjustable guide-rail clamp

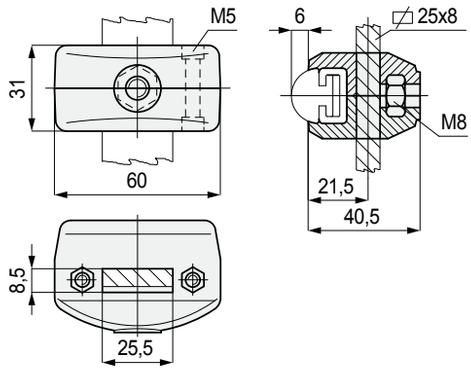

Code	Weight kg
63151	0,06

- Material: guide rail clamp in reinforced polyamide PA FV (black).
  Bolts in austenitic stainless steel. Nuts in nickel plated brass.
- Packaging: 24 pieces.

• **Assembly** of Part. S0237
Unlimited height adjustment possible

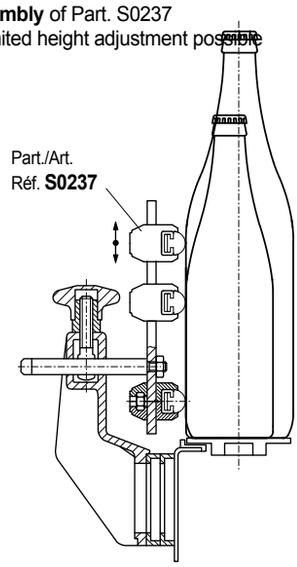

Part. S0247

Guide rail (round)

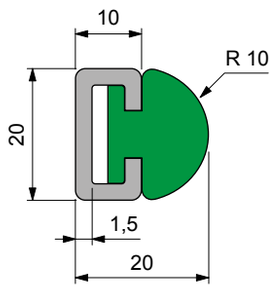

Length metres	Metal profile material	Code	Weight kg/m
Plastic profile material in polyethylene UHMWPE (green)			
3	Austenitic stainless steel	**63911**	0,67
	Zinc plated steel	**63921**	

- Min. curvature radius: 145 mm.
- Linear expansion coefficient: 2 x 10^{-4} °C^{-1}.
  Calculation of thermal expansion see Technical information.
- Accessories:

Guide - Rail Clamps.

Notes

www.rexnord.com

Please contact our Application Engineers at +31 174 445 111 for assistance with product selection.

38716.Rexnord Catalog Marbett_5 - ENG S086-S117 blauw_v8.indd 93 18-09-18 08:13

Guide - Rail Clamps for
• Round steel rods

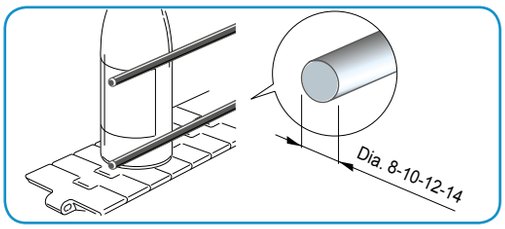

Part. S0082P

Guide-rail clamp

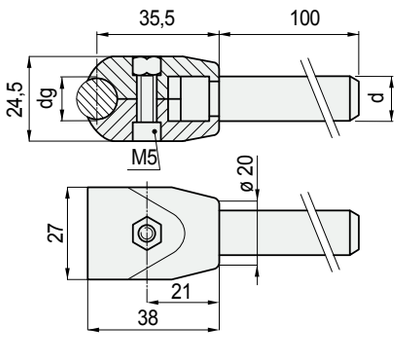

pin dia. d mm	Guide dia. dg mm	Code	Weight kg
12	12	**6184910**	0,12

- Material: guide rail clamps in reinforced polyamide PA FV (black).
  Pin in austenitic stainless steel.
  Bolt in austenitic stainless steel. Nut in nickel plated brass.
- Packaging: 24 pieces.

• Pin dimensions for Part. S0082 - S0082B
Pin dia. 12 mm

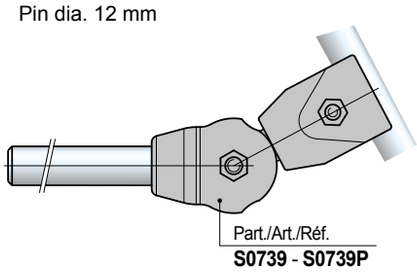

Pin dia. 12 mm

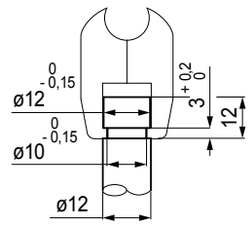

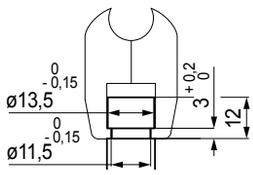

REXNORD

for round steel Rods

- **Assembly** of Part. S0159
  PET bottle movement
  (subject to swelling).

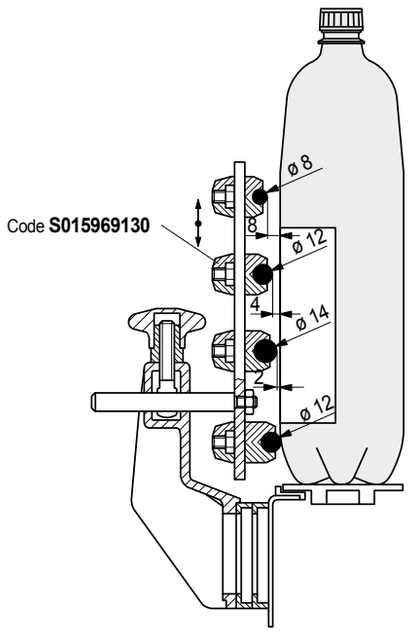

Adjustable guide-rail clamp

Part. S0159

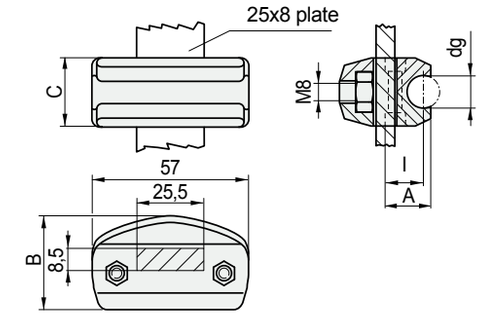

For 25 x 8 plates

Guide dia. dg mm	I mm	A mm	B mm	C mm	Code	Weight kg
10	12	15,8	32,5	21	**S0159622381**	0,05
12	14	17,8	35	25	**S015969130**	

- Material: guide rail clamp in reinforced polyamide PA FV (black).
  Bolts in austenitic stainless steel. Nuts in nickel plated brass.
- Packaging: 24 pieces.

Guide - Rail Clamps

for round steel Rods

Part. S0071

Double guide-rail clamp

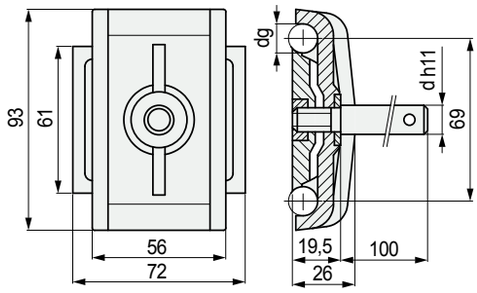

pin dia. d mm	Guide dia. dg mm	Code	Weight kg
12	12	**50960**	0,20

- Material: guide rail clamp in reinforced polyamide PA FV (black).
  Pin in austenitic stainless steel.
  Washer in austenitic stainless steel.
  Nut in nickel plated brass.
- Packaging: 24 pieces.

Part. S0070

Double guide-rail clamp

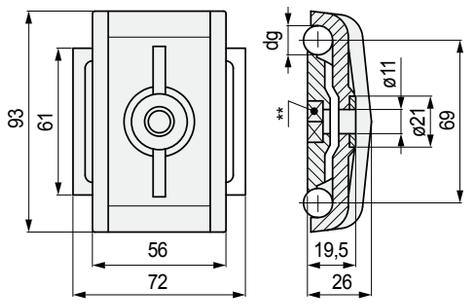

** = Seat for nut M10
UNI 5588

Pin dia. d mm	Code	Weight kg
12	**50950**	0,09

- Material: guide rail clamps in reinforced polyamide PA FV (black).
  Washer in austenitic stainless steel.
- State of supply: supplied without tightening nut.
- Packaging: 24 pieces.
- Accessories: swivel pin connection.

38716.Rexnord Catalog Marbett_5 - ENG S086-S117 blauw_v8.indd 96 18-09-18 08:13

Guide - Rail Clamps

for round steel Rods

• **Assembly** of Part. S0698

Fixing on plates

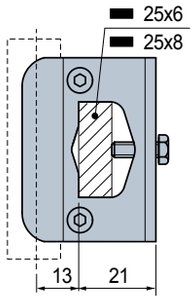

Fixing on rods

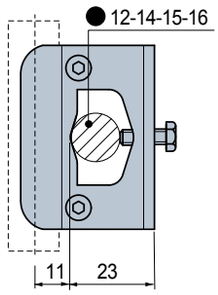

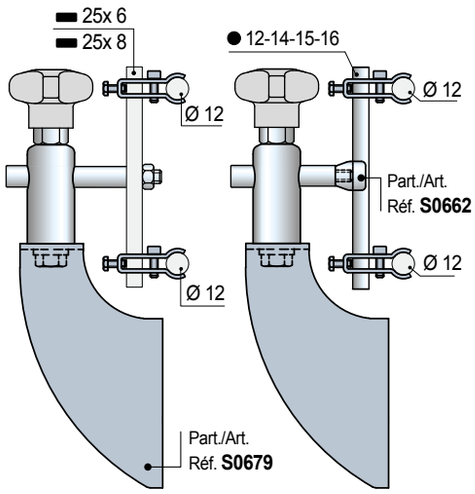

Guide-rail clamp

Part. S0698

With two fixing screws

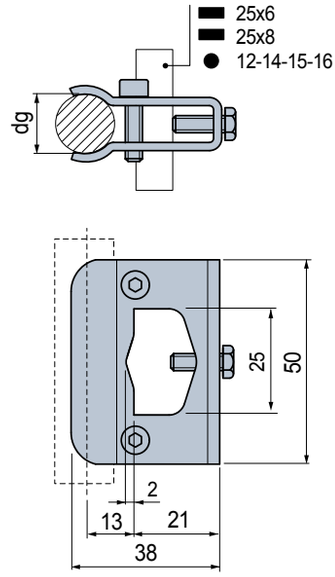

Guide dia. d mm	Code	Weight kg
12	**689202**	0,10

- Material: clamp and bolt in austenitic stainless steel.
- Packaging: 16 pieces.

• **Assembly** of Part. S0662

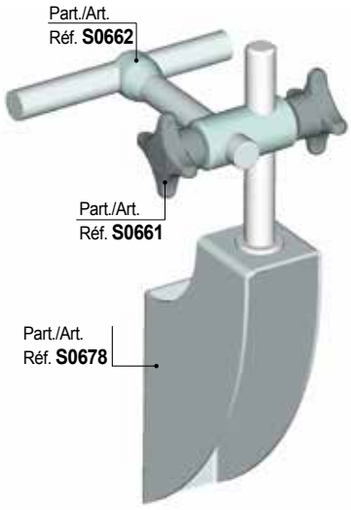

Guide-rail clamp

Part. S0662

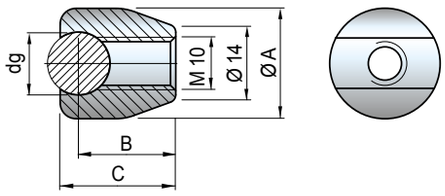

Guide dia. dg mm	Code	dia. A mm	B mm	C mm	Weight kg
12	**669552**	21	18,5	22	0,03

- Material: austenitic stainless steel.
- Packaging: 10 pieces.

Guide - Rail Clamps

for round steel Rods

Part. S0050

Double guide-rail clamp

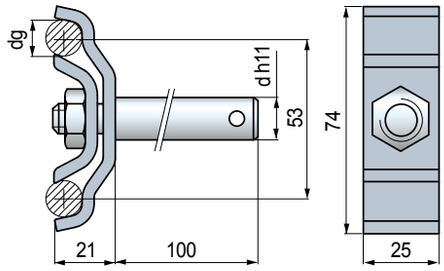

Guide dia. dg mm	pin dia. d mm	Code	Weight kg
12	12	**53801**	0,34
	14	**51000**	0,36

- Material: guide rail clamp and tightening nut in austenitic stainless steel. Pin in austenitic stainless steel.
- Packaging: 12 pieces.

• **Assembly** of Part. S0050

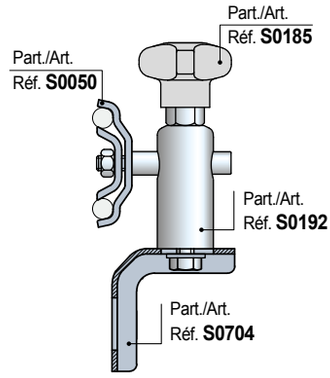

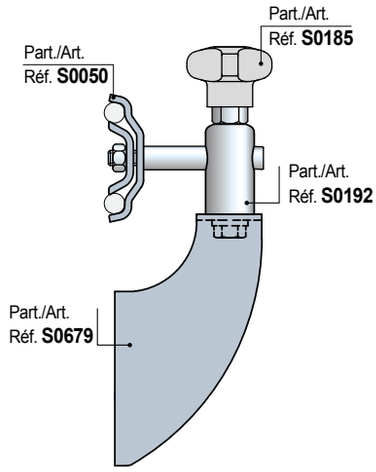

Notes

www.rexnord.com

Please contact our Application Engineers at +31 174 445 111 for assistance with product selection.

38716.Rexnord Catalog Marbett_5 - ENG S086-S117 blauw_v8.indd 99 18-09-18 08:13

Guide - Rail Clamps for
• Part. S0191

Part. S0190

Guide-rail clamp

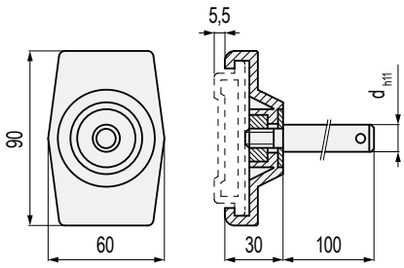

Pin dia. d mm	Code	Weight kg
12	**55741**	0,18

- Material: guide rail clamp in rinforced polyamide PA FV (black).
  Pin in austenitic stainless steel.
  Washer in austenitic stainless steel. Nut in nickel plated brass.
- Packaging: 24 pieces.
- **Suitable to use in curves also.**

• **Assembly** of Part. S0190

The protrusion of the pin allows the guide to be locked axially.

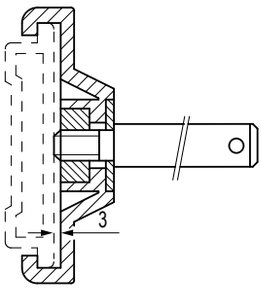

Part. S0184

Guide-rail clamp

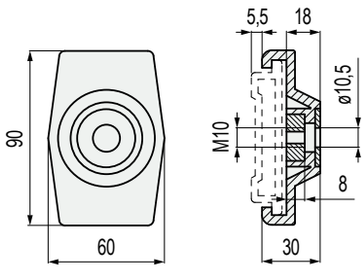

Code	Weight kg
54961	0,09

- Material: guide rail clamp in rinforced polyamide PA FV (black). Washer in austenitic stainless steel.
  Nut in nickel plated brass.
- Packaging: 24 pieces.
- **Suitable to use in curves also.**

S0296

Guide - Rail Clamps for
• Part. S0296

• **Assembly** of Part. S0298

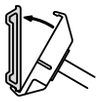

1) Untighten the screws
2) Clip on to the profile
3) Slide along the guide to the desired position and tighten screws to lock in place.

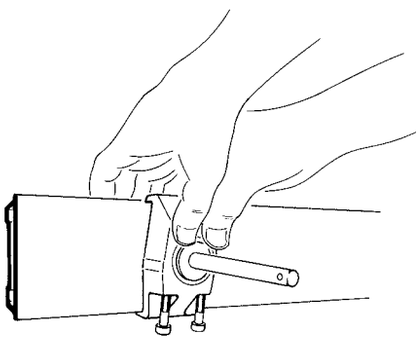

Guide-rail clamp

Part. S0298

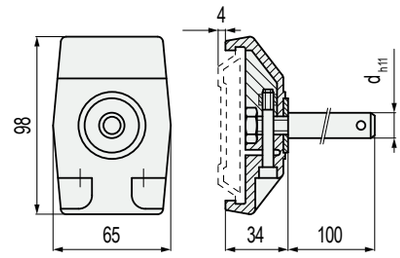

Pin dia. d mm	Code	Weight kg
12	**60372**	0,12

- Material: guide rail clamp in rinforced polyamide PA FV (black).
  Pin in austenitic stainless steel.
  Washer in austenitic stainless steel. Nut in nickel plated brass.
- Packaging: 24 pieces.
- Suitable to use in curves also.

Guide-rail clamp

Part. S0298

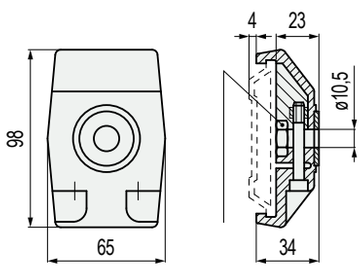

Code	Weight kg
60362	0,12

- Material: guide rail clamp in rinforced polyamide PA FV (black). Washer in austenitic stainless steel.
  Nut in nickel plated brass.
- Packaging: 24 pieces.
- Suitable to use in curves also.

Part. S0708

Bracket with two holes

Version without positioning guide

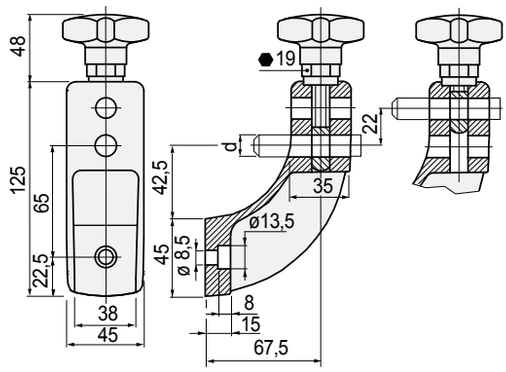

Pin dia. d mm	Code	Weight kg
Version without positioning guide		
12	**692502**	0,23

- Material: bracket and knob in reinforced polyamide PA FV (black).
  Hexagonal insert (for 19 mm wrench) in nickel plated brass.
  Eyebolt in austenitic stainless steel.
- Max recommended tightening torque: 4 Kgm.
- Packaging: 12 pieces.

- **Characteristics** of Part. S0708
  - Bracket with a reduced structure-connecting size.
  - Available with positioning guide for an easy assembly on aluminium sections.
  - The two holes allows to position the guide-rail bracket in two different heights depending on specific requirements.

- **Assembly** version with positioning guide

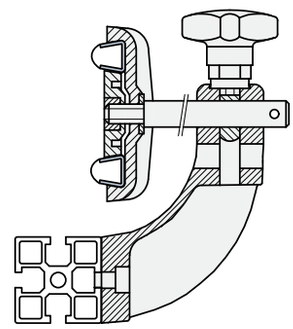

- **Assembly** version without positioning guide

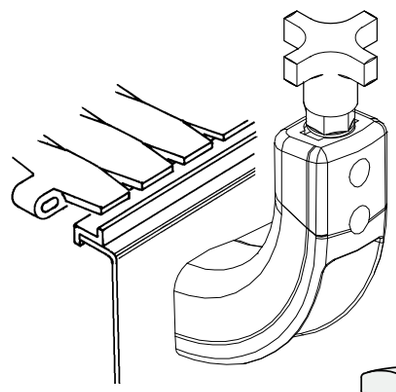

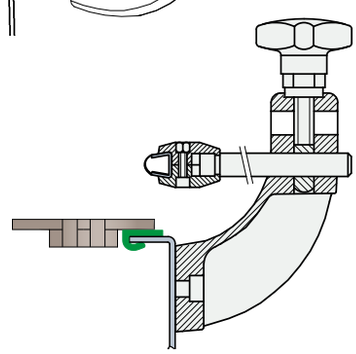

- **Assembly** version with centering pin

• **Deflection** of Part. S0107

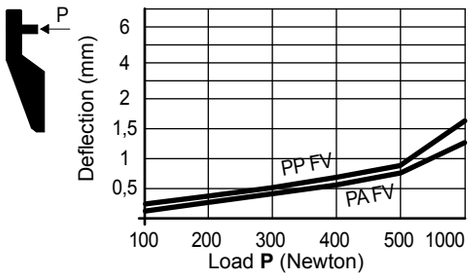

• **Technical data** Part. S0107

- Sliding load resistance:

Material in PA FV
2000 N (width d = 12)
3200 N (width d = 14)
Material in PP FV
1300 N (width d = 12)
1700 N (width d = 14)

- Breaking load:

Material in PA FV
4500 N
Material in PP FV
3300 N

Tests performed at tightening torque: 4 Kgm

• **Accessories**
Spacer Part. S0061.
Applicable to Part. S0107

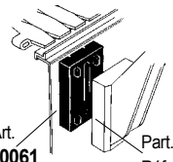

Spacer Part. S0142.
Applicable to Part. S0599

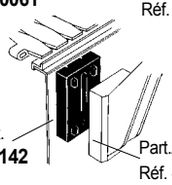

• **Assembly of drip tray support**
Part. S0226 - S0336.
Part. S0107 e S0599
permit application of drip tray support.

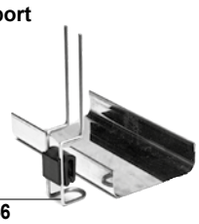

• **Use** Part. S0599
Same dimensions as Part. S0163 - S0178 - S0257, can be used alternatively.

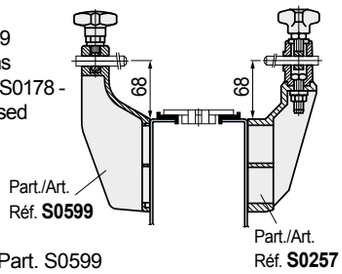

• **Deflection** of Part. S0599

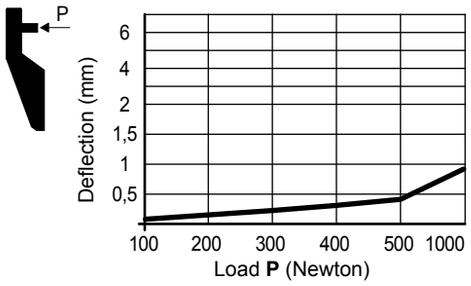

• **Technical data** Part. S0599

- Sliding load resistance:

2000 N (width d = 12)

- Breaking load:

3000 N

Tests performed at tightening torque: 4 Kgm

Bracket with eyebolt

Part. S0107

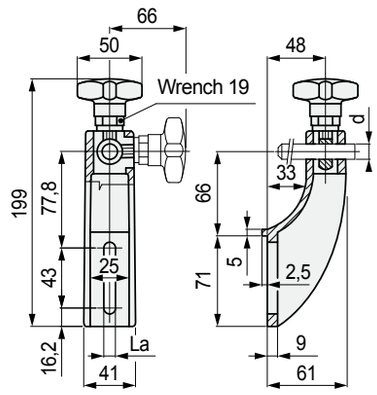

With nut

Material	Pin dia. d mm	Code La = 9	Code La = 10,5	Weight kg
With lip				
Reinforced polyamide PA FV	**12**	**50710N**	**68200N**	0,15

- Material: knob in reinforced polyamide (black), exagonal insert (for 19 mm wrench) in nickel plated brass, eyebolt in austenitic stainless steel.
- Colour: black.
- Max recommended tightening torque: 4 Kgm.
- Packaging: 12 pieces.

Bracket with eyebolt

Part. S0599

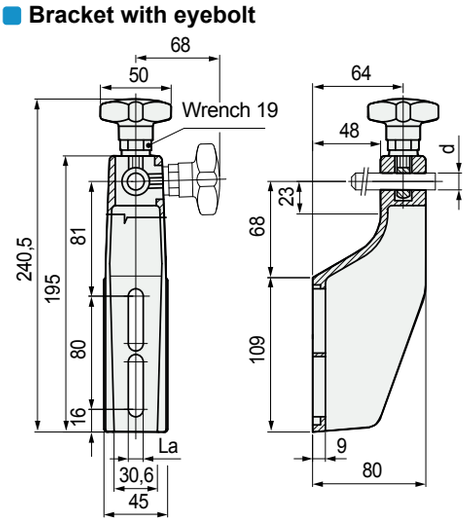

Material	Pin dia. d mm	Code La = 9	Code La = 10,5	Weight kg
Reinforced polyamide PA FV	**12**	**611293**	**613572**	0,11

- Material: knob in reinforced polyamide (black), exagonal insert (for 19 mm wrench) in nickel plated brass, eyebolt in austenitic stainless steel.
- Colour: black.
- Max recommended tightening torque: 4 Kgm.
- Packaging: 12 pieces.

Part. S0617

Bracket with eyebolt

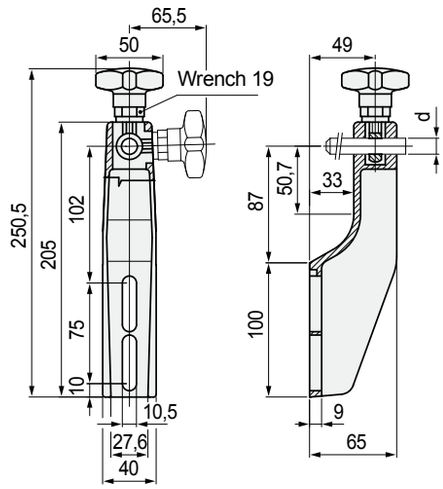

Material	Pin dia. d mm	Code	Weight kg
Reinforced polyamide PA FV (black))	**12**	**613562**	0,18

- Material: knob in reinforced polyamide (black), exagonal insert (for 19 mm wrench) in nickel plated brass, eyebolt in austenitic stainless steel.
- Max recommended tightening torque: 4 Kgm.
- Packaging: 12 pieces.

• **Deflection** of Part. S0617

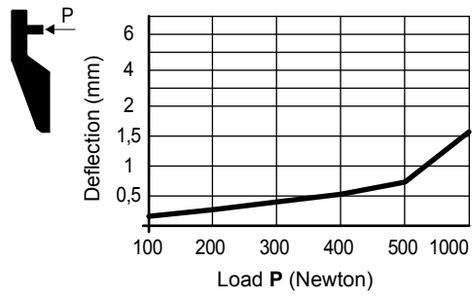

• **Technical data** Part. S0085

- Sliding load resistance: 2000 N (width d = 12)
- Breaking load: 3000 N

Tests performed at tightening torque: 4 Kgm

• **Accessories**

Spacer Part. S0142. Applicable to Part. S0617 - S0140.

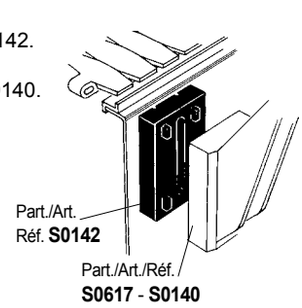

Part. S0140

Bracket with eyebolt

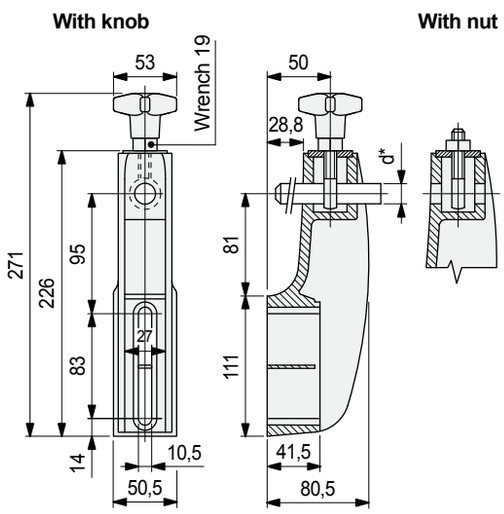

Pin dia. d* mm	Version	Code	Weight kg
14÷16	with knob	**66690N**	0,47

* = The bracket can be used with dia. 14 and dia. 16 mm pins.
- Material: bracket and knob in reinforced polyamide (black), exagonal insert (for 19 mm wrench) in nickel plated brass, tightening nut and eyebolt in austenitic stainless steel.
- Max recommended tightening torque: 4 Kgm.
- Packaging: 12 pieces.

• **Assembly of drip tray support**

Part. S0226 - S0336. Part. S0617 - S0140 permit application of drip tray support.

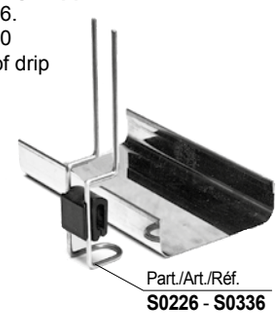

• **Deflection** of Part. S0140

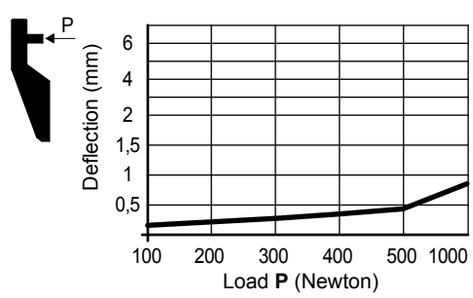

• **Technical data** Part. S0140

- Sliding load resistance: 3000 N (width d = 14-16)
- Breaking load: 12000 N

Tests performed at tightening torque: 4 Kgm

• **Assembly** with swivel head Part. S0255

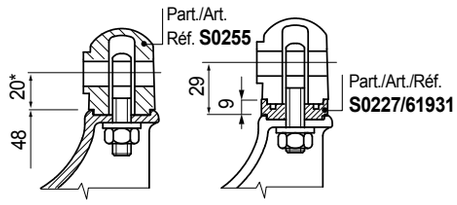

* = To increase the height (by 9 mm) use 1 spacer Part. S0227 code 61931. The length of the thread allows for only 1 spacer.

• **Assembly** with swivel head Part. S0359

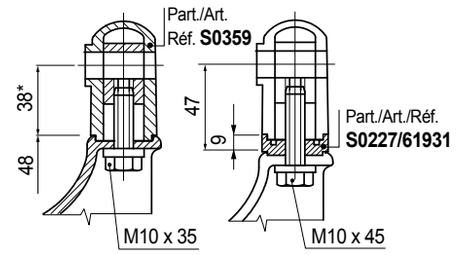

* = To increase the height (by 9 mm) use 1 or more spacer Part. S0227 code 61931.
To use the spacer a longer screw is necessary.

• **Assembly** with swivel head Part. S0256

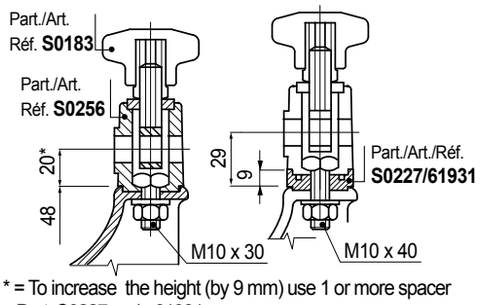

* = To increase the height (by 9 mm) use 1 or more spacer Part. S0227 code 61931.
To use the spacer a longer screw is necessary.

• **Assembly** with swivel head Part. S0192

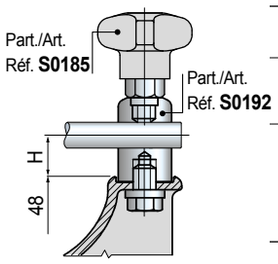

H mm	Head code Part. S0192
20	53091-60933 see page S108
37 57 87 127	See heads Page S108

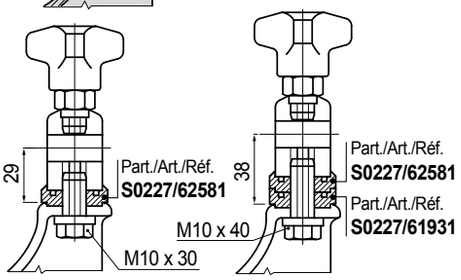

To use the spacer Part S0227, a longer screw is necessary.

Adjustable bracket

Part. S0632

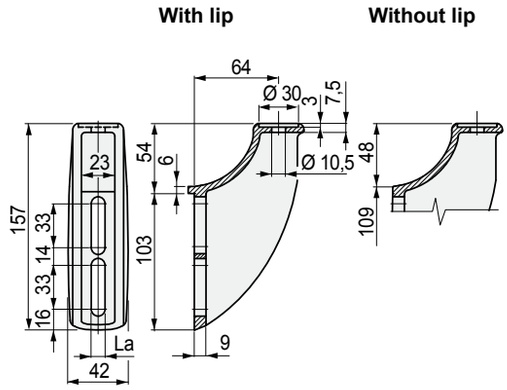

Version	Code La = 9	Code La = 10,5	Weight kg
Without lip	**605263**	**647142**	0,21

- Material: reinforced polyamide PA FV (black).
- Packaging: 12 pieces.
- Accessories: spacer Part. S0725.

• **Assembly** Part. S0632

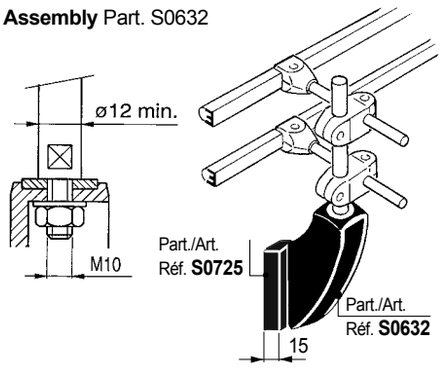

• Part. S0632 permit application of drip tray support Part. S0226 - S0336.

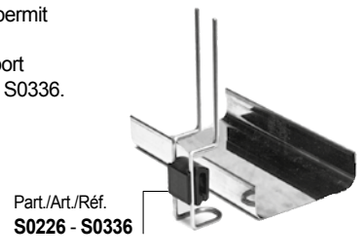

• **Deflection** of Part. S0632

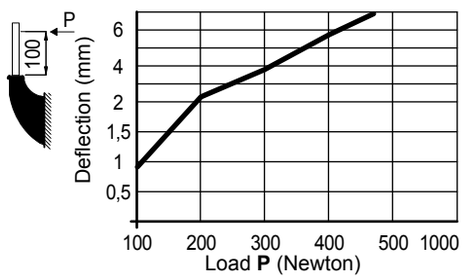

• **Breaking load P**

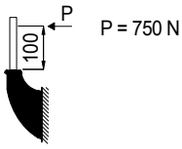

P = 750 N

Part. S0637

Adjustable bracket

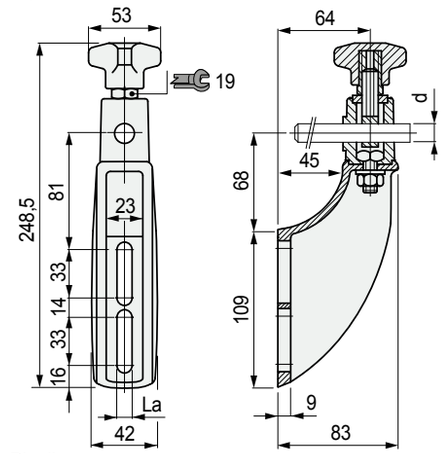

Pin dia. d mm	Code La = 10,5 mm	Weight kg
12	**648372**	
14	**648382**	0,40
16	**648392**	

- Material: bracket, swivel head and knob in reinforced polyamide (black), hexagonal insert (for 19 mm wrench) in nickel plated brass, eyebolt and tightening nuts/bolt in austenitic stainless steel.
- Operation: by untightening the bolt, the position of the top can be adjusted. By untightening the knob, the position of the pin can be adjusted.
- Max recommended tightening torque: 4 Kgm.
- Packaging: 12 pieces.

• **Deflection** of Part. S0637 - S0638

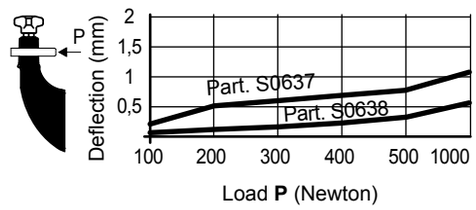

• **Technical data** Part. S0637 - S0638

- Sliding load resistance:

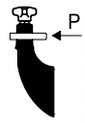

P Part. S0637
2000 N (width d = 12)
3000 N (width d = 14 - 16)
Part. S0638
No sliding

- Breaking load:

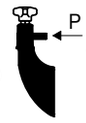

P Part. S0637
4000 N
Part. S0638
3500 N

Tests performed at tightening torque: 4 Kgm

• Part. S0637 - S0638 permit application of 1 or more spacer Part. S0725.

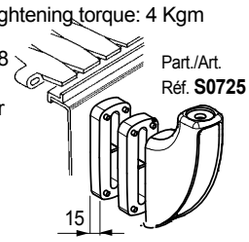

• Part. S0637 permit application of spacer Part. S0227.

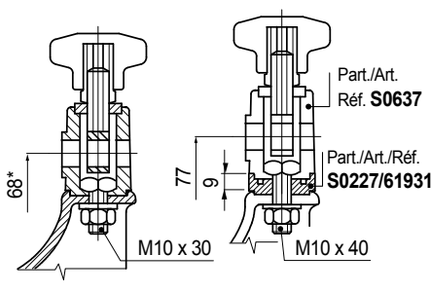

* = To increase the height (by 9 mm) use 1 spacer Part. S0227 code 61931.
To use the spacer a longer screw is necessary.

To use the spacer Part. S0227 a longer screw is necessary.

• Part. S0226 - S0336. Part. S0637 and S0638 permit application of drip tray support.

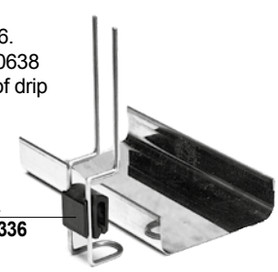

• **Assembly of** Part. S0862
Applicable to brackets Part. S0632 - S0648 - S0540

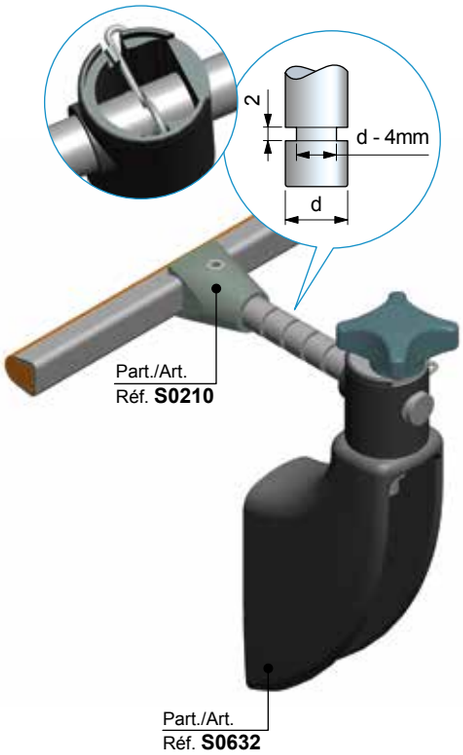

Swivel head

Part. S0862

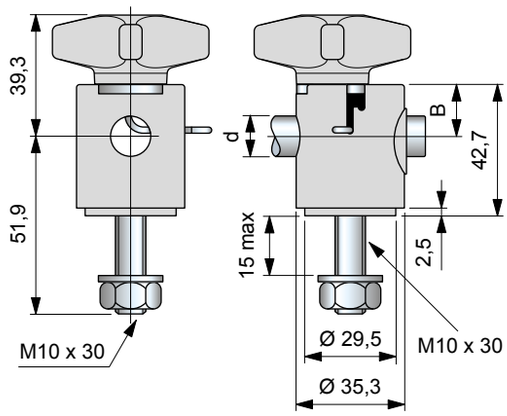

Pin dia. d mm	Pin dia. d inch	B	Code	Weight kg
12	1/2”	16,9	**649763**	
14	-	17,5	**649773**	0,08
16	5/8”	18,4	**649783**	

- Material: clamp and knob in reinforced polyamide PA FV (black).
  Tightening nut and eyebolt in austenitic stainless steel.
- Packaging: 12 pieces.

• **Assembly of** Part. S0256
Applicable to brackets Part. S0632 - S0648 - S0540
(in combination with knob Part. S0183).

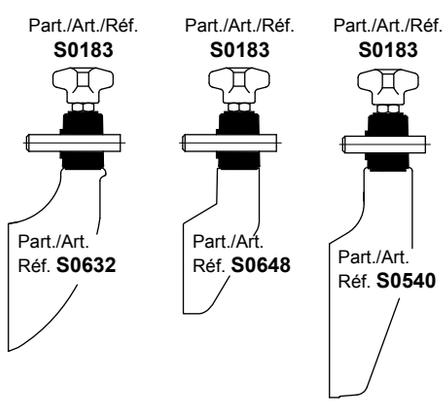

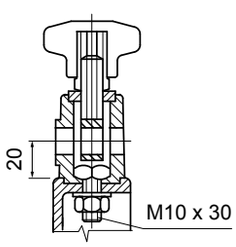

Swivel head

Part. S0256

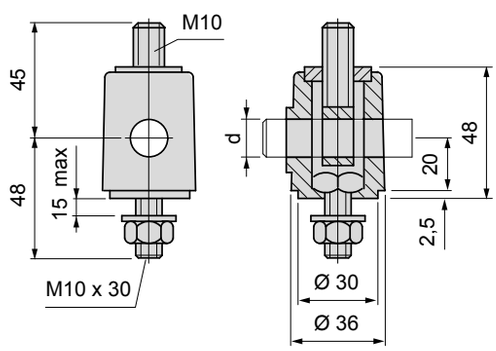

Material	Pin dia. d mm	Code	Weight kg
Reinforced polyamide PA FV (black)	12	**64561**	
	14	**64571**	0,12
	16	**64581**	

- Material: tightening nut and eyebolt in austenitic stainless steel.
- Packaging: 12 pieces.

Part. S0192

Swivel head

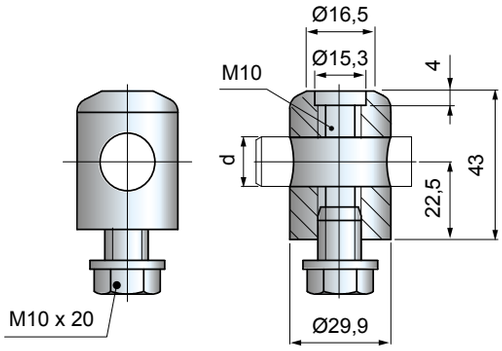

Pin dia. d mm	Materiale	Code	Weight kg
12 (1/2")	Austenitic stainless steel	**608683**	0,19
14÷16*	Austenitic stainless steel	**53091**	

* = the bearing head can be used with dia.14 and dia.16 mm pins.
- Material: tightening bolt in austenitic stainless steel.
- Packaging: 50 pieces.

Swivel head with positioner

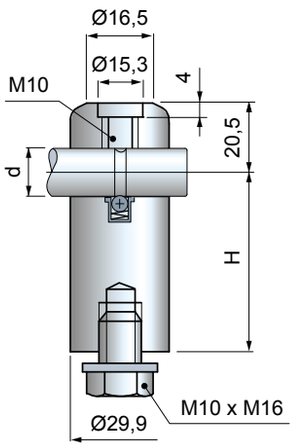

Pin dia. d mm	H mm	Code: Sans positionneur	Code: Avec positionneur	Weight kg
14÷16*	40	**674012**	**673962**	0,29
	60	**674022**	**673972**	0,40

* = Version with positioner can be used only with dia.16 mm pins.
- Material: swivel head in austenitic stainless steel. Tightening bolt in austenitic stainless steel.
- Packaging: 10 pieces.

• **Assembly** of Part. S0192
Applicable to brackets Part. S0632 - S0648 - S0540 (in combination with knob Part. S0185).

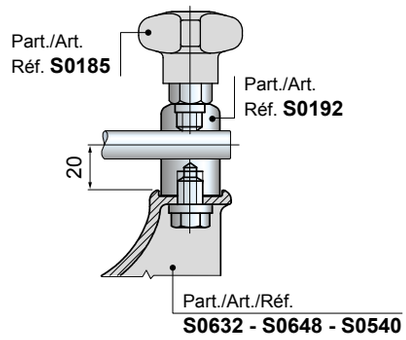

• **Use** of Part. S0192

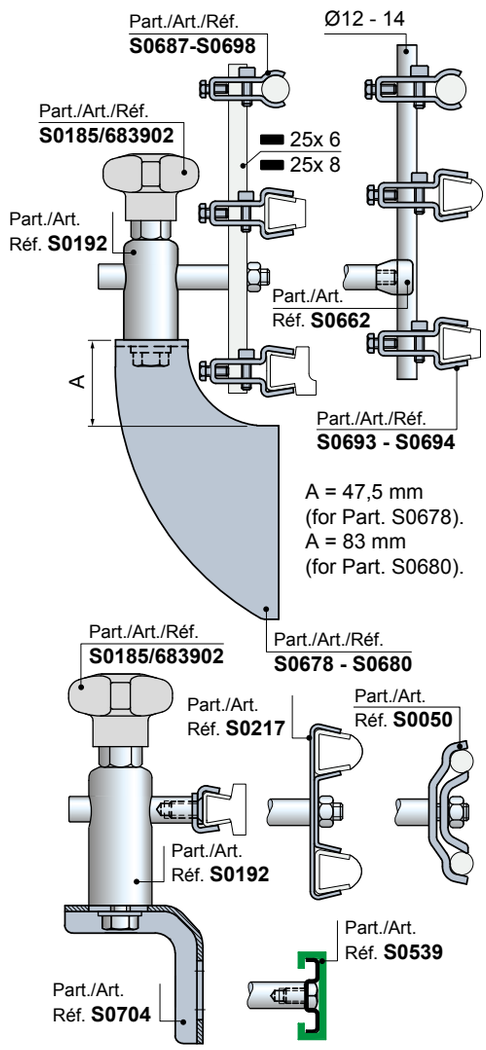

• **Pin dimension** for positioner

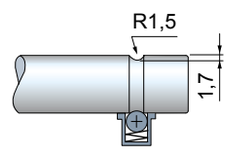

Eyebolt

Part. S0000

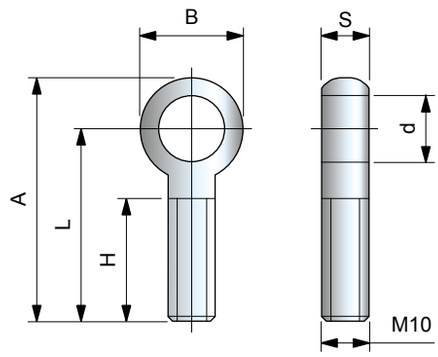

d mm	L mm	H mm	A mm	B mm	S mm	Code
13	30	18	41	20	10	**65624**
14,2	30	20	41	20	10	**61005**
20,5	36	22	50	27	7,3	**675902**

- Material: austenitic stainless steel.
- Packaging: 50 pieces.

Part. S0061

Spacer

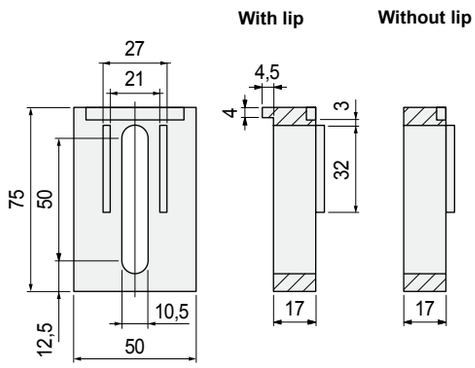

Version	Code	Weight kg
With lip	**66194N**	0,04
Without lip	**50870N**	

- Material: reinforced polyamide PA FV (black).
- Packaging: 24 pieces.

• **Assembly** of Part. S0061

Applicable to Part. S0010 - S0097 - S0107 - S0648 - S0650 - S0651 - S0652 - S0653.

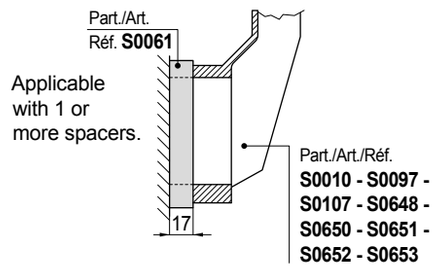

Advantages of version with lip:

Possibility of resting on side of conveyor frame.

Possibility of assembling several spacers, all centred.

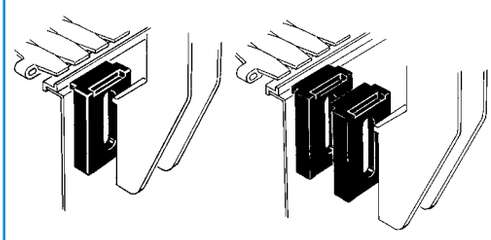

• **Assembly of drip tray support**
Part. S0226 - S0336.
Part. S0061 - S0142
permit application of drip tray support.

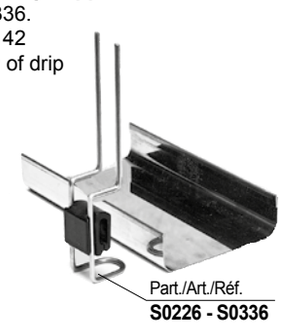

REXNORD

Part. S0725

- **Assembly** of Part. S0725
  Applicable to Part. S0632 - S0635 - S0636 - S0637 - S0638.

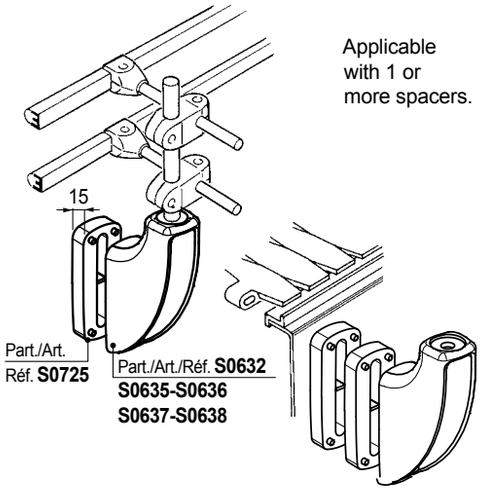

- **Assembly of drip tray support**
  Part. S0226 - S0336.
  Part. S0725
  permit application of drip tray support.

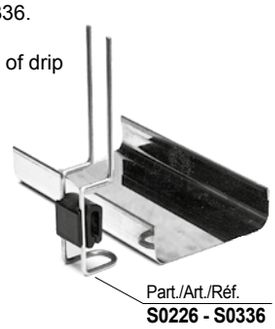

Spacer

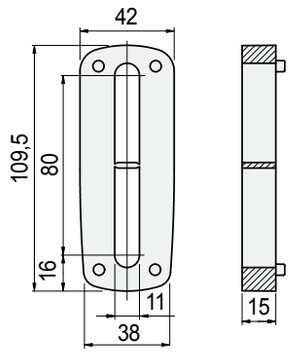

Code	Weight kg
688762	0,05

- Material: reinforced polyamide PA FV (black).
- Packaging: 24 pieces.

Part. S0226

Drip tray support

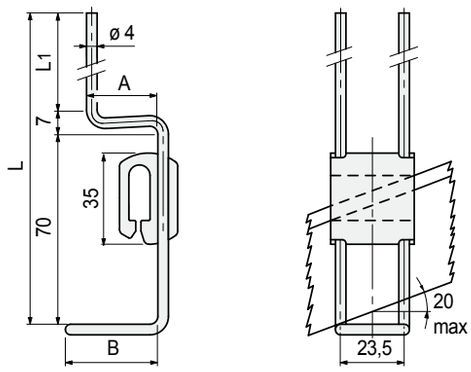

Bent rod

Height L mm	L1 mm	A mm	B mm	Code Part. S0336 Split	Weight kg
180		27	35	**60574N**	
230	153	27	35	**697801N**	0,06
310	233	18	35	**68299N**	

- Material: body in reinforced polypropylene PP FV (black), support element in austenitic stainless steel, self-tapping screw (only for Part. S0336) in stainless steel.
- Packaging: 100 pieces.

• **Assembly** of Part. S0226 (standard)

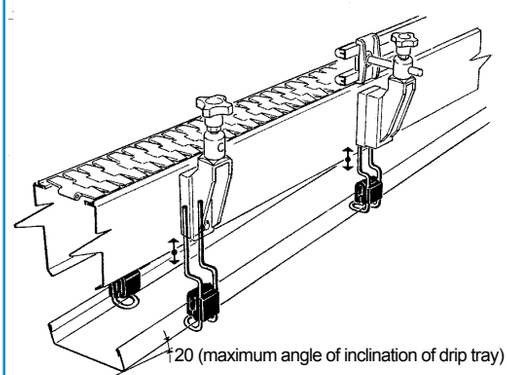

• **Drip tray** design

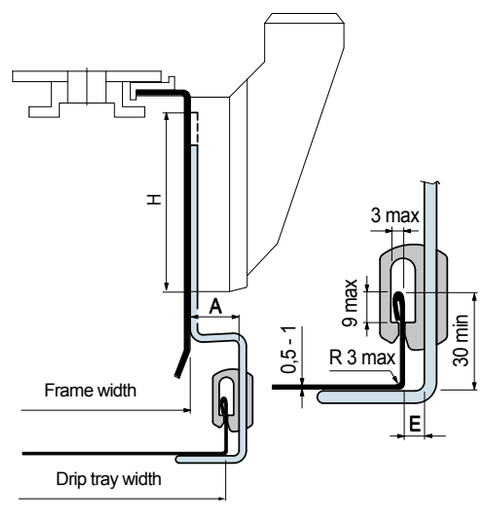

Drip tray width = Frame width + 2 • (A - E)

A = see table with codes

E = 10 mm for Part. S0226 (standard)

Bracket Part.	Rod slot length H mm
S0081 - S0088	70
S0072 - S0089	102,5
S0085	53
S0010 - S0097	71
S0107	72
S0599	104
S0140	106
S0617	95
S0632 - S0635 - S0636 - S0637 - S0638	103,5
S0540 - S0541 - S0542 - S0543 - S0544	123

• **Assembly** of Part. S0336

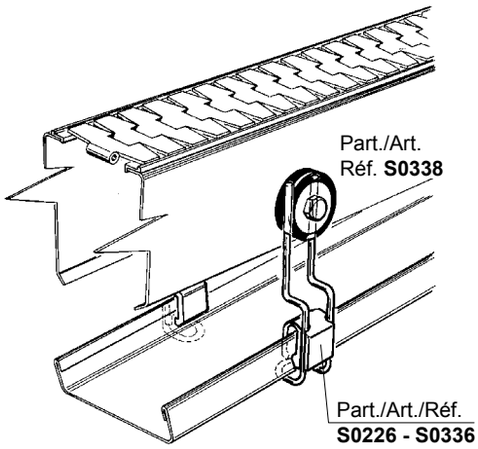

Mounting plate

Part. S0338

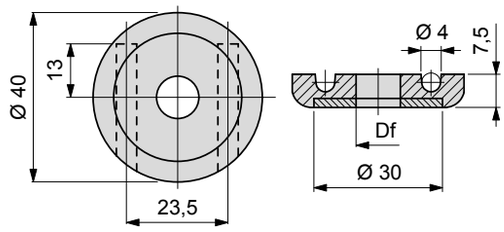

Bore dia. Df mm	Code	Weight kg
9	**67563**	0,20

- Material: plate in reinforced polyamide (black), washer in austenitic stainless steel.
- Packaging: 100 pieces.

Part. S0692

Bracket

Standard version

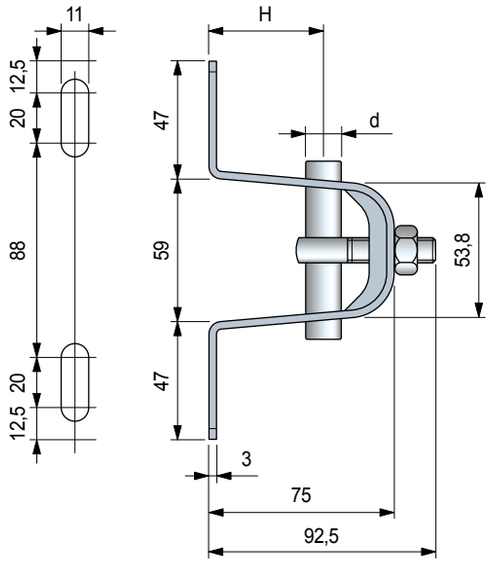

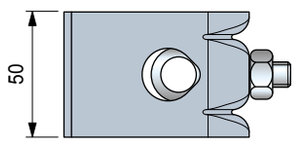

Pin dia. d mm	H mm	Code Standard version	Weight kg
20	42	**686302N**	0,33

- Material: bracket and bolt in austenitic stainless steel.
- Max recommended tightening torque: 2 Kgm.
- Packaging: 6 pieces.

• **Use** of Part. S0692

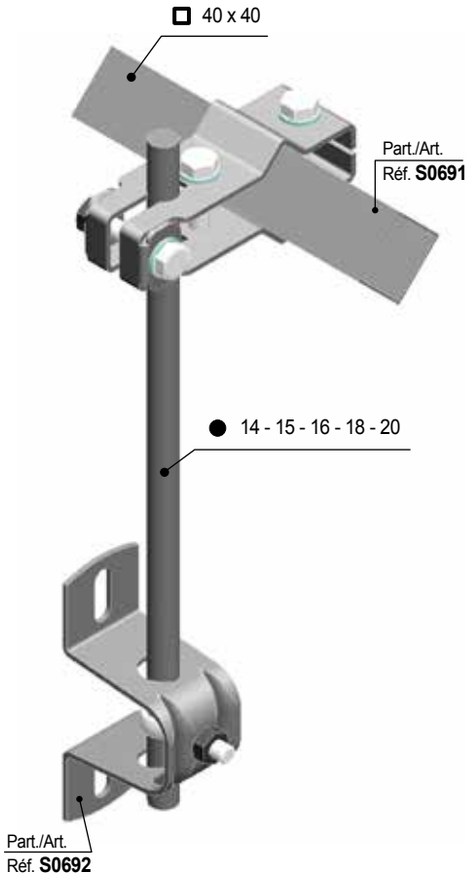

• **Use** of Part. S0699

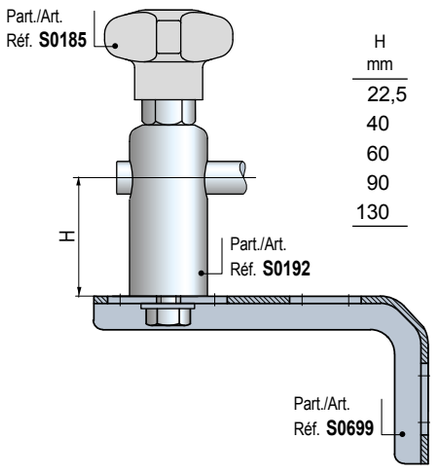

H mm
22,5
40
60
90
130

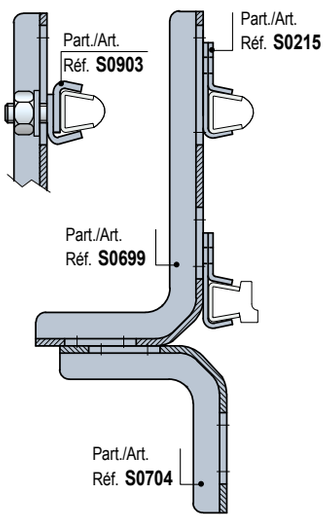

Bracket

Part. S0699

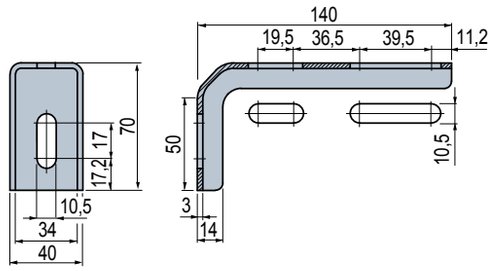

Code	Weight kg
684872	0,23

- Material: austenitic stainless steel.
- Packaging: 6 pieces.

Part. S0661

Cross clamp

Version without knobs

Version with knobs

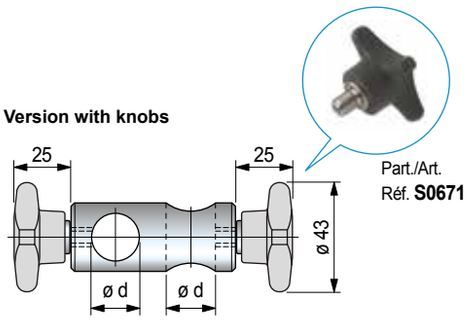

Pin dia. d mm	Code With knobs	l mm	A mm	B mm	ø De mm
12	**675722**	16	40	12	20

- Material: clamp in austenitic stainless steel.
  Knob in reinforced polypropylene PP FV (grey).
  Threaded insert in austenitic stainless steel.
- Max recommended tightening torque: 1 Kgm (with knob)
  2 Kgm (with screw).
- Packaging: 24 pieces.

• **Use** of Part. S0661

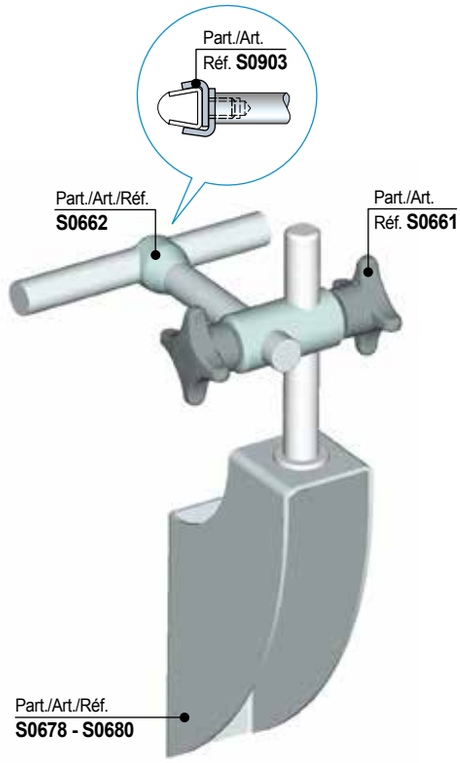

Part. S0732

Cross clamp with Quick-Set

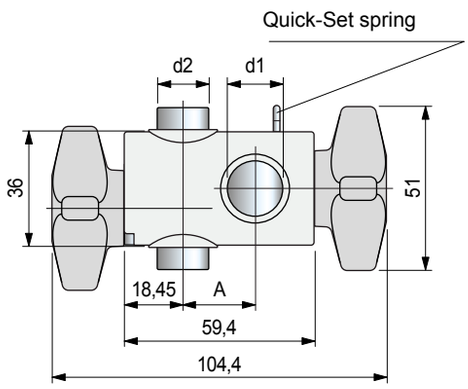

Pin dia. **d1** with spring mm	inch	Pin dia. **d2** mm	inch	A	Code	Weight kg
12	1/2”	12	1/2”	24,1	**692352N**	0,18
12	1/2”	16	5/8“	24,1	**692362N**	
16	5/8”	12	1/2”	22	**638703N**	
16	5/8”	16	5/8”	22	**692372N**	

- Quick-Set spring on one of the two rods.
- Material: clamp and knobs in reinforced polyamide PA FV (black).
  Eyebolts in austenitic stainless steel.
- Max recommended tightening torque: 2 Kgm.
- Packaging: 24 pieces.

• **Use** of Part. S0732

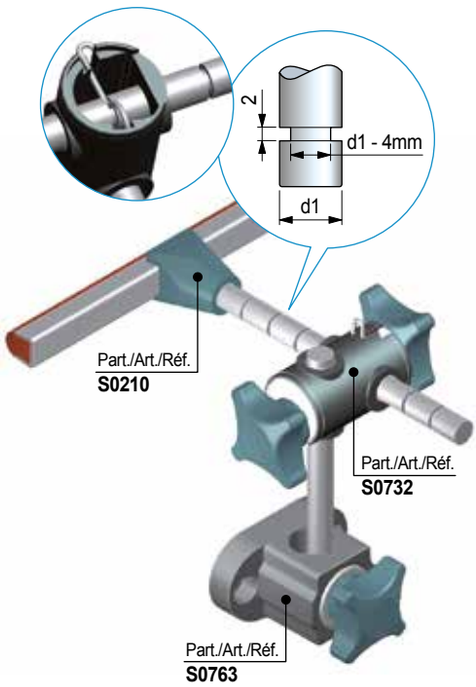

REXNORD

- **T - clamp** Part. S0763
  Available with nut or tightening knob.

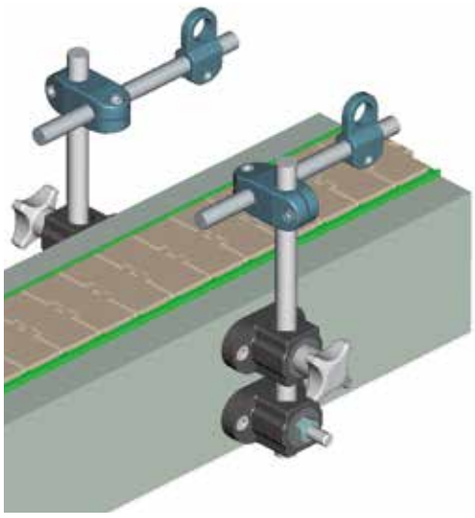

- Can be used in combination with cross clamps
  Part. S0661 and S0732

Part./Art./Réf. **S0661**

Part./Art./Réf. **S0732**

T - clamp with eyebolt

Part. S0763

With nut

With knob

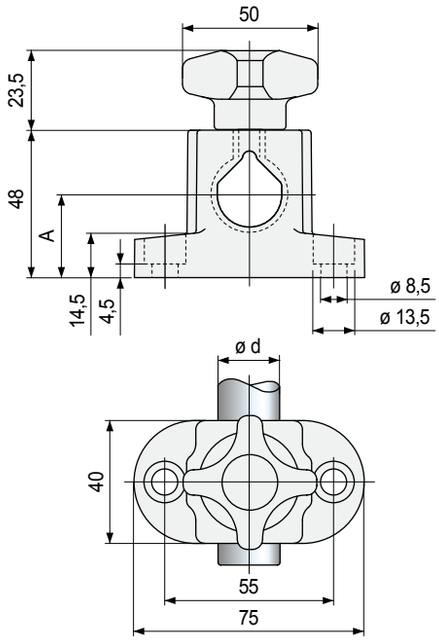

Version	Rod dia. d mm	A mm	Code	Weight kg
with knob	20	27	**610633**	0,12

- Material: clamp and knob in reinforced polyamide PA FV (black). Threaded insert in nickel plated brass, nut, washer and eyebolt in austenitic stainless steel.
- Max recommended tightening torque: 4 Kgm.
- Packaging: 24 pieces.

38716.Rexnord Catalog Marbett_5 - ENG S086-S117 blauw_v8.indd 117 18-09-18 08:14

Part. S0340

Cross clamp

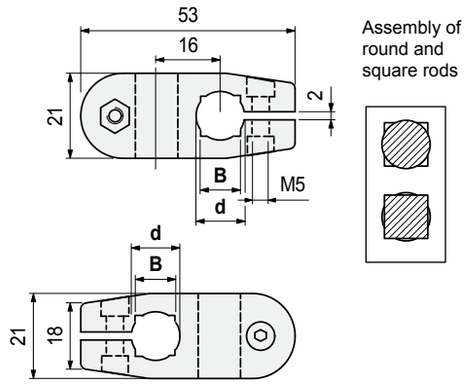

Tightening bolt material	Rod dia. d mm	Square rod B mm	Code	Weight kg
Austenitic stainless steel	10	8	68373	0,02
	12	10	68385	
	14	12	67375	
Zinc plated steel	12	10	627041	

- Material: clamp in reinforced polyamide PA FV (black).
- Max. recommended tightening torque: 0,5 Kgm.
- Packaging: 24 pieces.

Part. S0174

Cross clamp

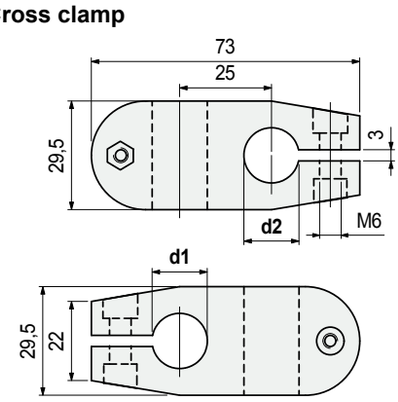

Material	Rod dia. d1 mm	Rod dia. d2 mm	Code	Weight kg
Reinforced polyamide PA FV (black)	14	14	S017457941	0,07
	16	16	S017453781	

- Material: tightening bolt in austenitic stainless steel.
- Max recommended tightening torque: 1 Kgm (Part. S0174); 1,5 Kgm.
- Packaging: 24 pieces.

• **Deflection** of Part. S0340

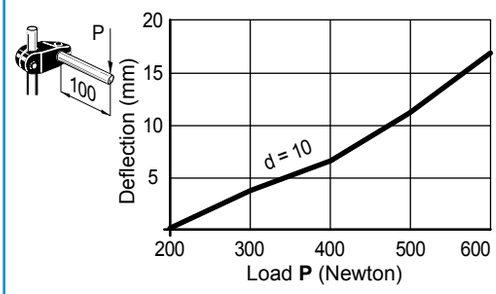

• **Technical data** Part. S0340
- sliding load: 1200 N
- rotation load: 5 N/m

Tests performed at tightening torque: 0,5 Kgm

• **Deflection** of Part. S0174 - S0174R

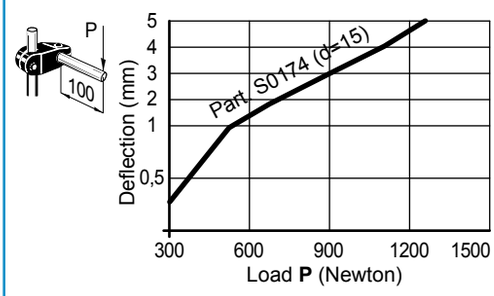

• **Technical data** Part. S0174
- sliding load: 2500 N (width d = 14 - 15 - 16)
  2800 N (width d = 18)
- rotation load: 13 N/m

Tests performed at tightening torque: 1 Kgm

• **Assembly** of Part. S0174 with ratchet handle

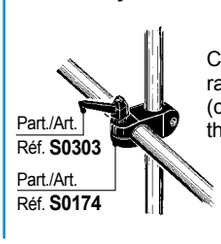

Can be applied with the ratchet handle Part. S0303 (code 60922), instead of the standard hardware.

Notes

www.rexnord.com

Please contact our Application Engineers at +31 174 445 111 for assistance with product selection.

38716.Rexnord Catalog Marbett_6 - ENG S118-S161 blauw_v7.indd 119 18-09-18 08:18

Part. S0339

T-clamp

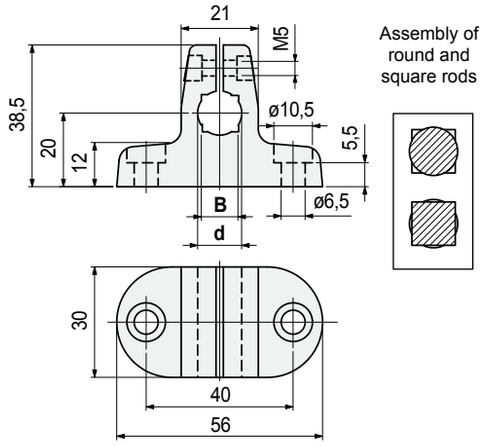

Tightening bolt material	Rod dia. **d** mm	Square rod **B** mm	**Code**	Weight kg
Austenitic stainless steel	**10**	**8**	**68363**	0,03
	12	**10**	**68375**	
	14	**12**	**67365**	
Zinc plated steel	**12**	**10**	**627011**	

- Material: clamp in reinforced polyamide PA FV (black).
- Max. recommended tightening torque: 0,5 Kgm.
- Packaging: 24 pieces.

• **Deflection** of Part. S0339

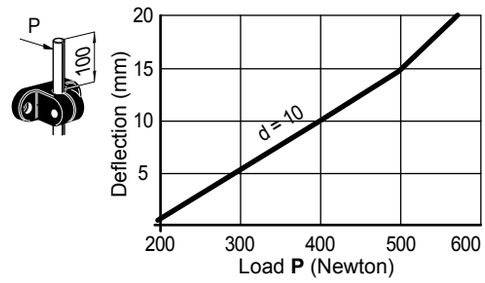

• **Technical data** Part. S0339
- sliding load: 650 N
- rotation load: 5 N/m

Tests performed at tightening torque: 0,5 Kgm

• **Assembly** of Part. S0339
Can be used in combination with Part. S0340

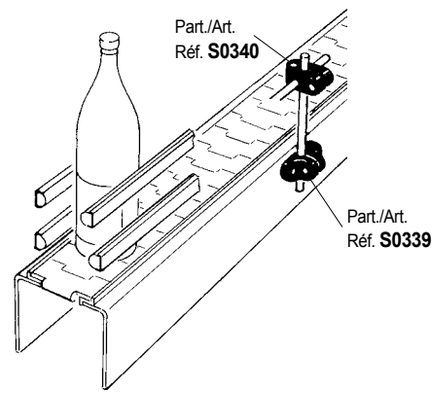

REXNORD

- **Characteristics** of Part. S0786
  Are indicated for end-line applications, to support centre guide or dividers, to separate and align containers before packing area.

- **Use** of Part. S0786 (for square and round tubes)

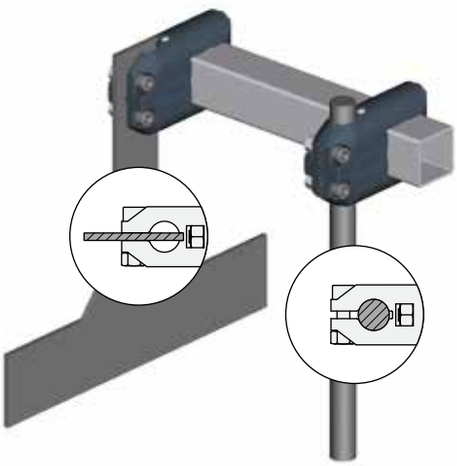

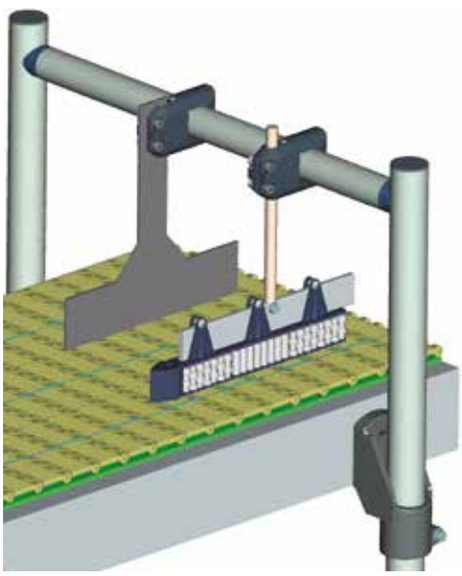

- **Use** of Part. S0786 (for square and round tubes)

Ratchet handle
spare part code
S0303622433

Cross clamp

Part. S0786

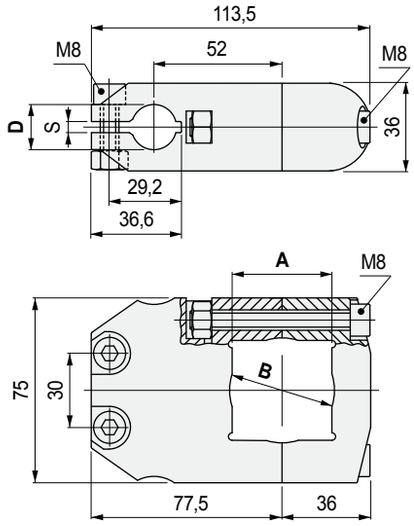

Square tube A mm	Round tube B mm	Round rod D mm	Plate S mm	Code	Weight kg
40	42,4	20	4	**621783**	0,27

- Material: clamp in reinforced polyamide PA FV (black), tightening screws in austenitic stainless steel, nuts in nickel plated brass.
- Max recommended tightening torque: 2 Kgm.
- Packaging: 8 pieces.

Cross clamp

Part. S0786

With nut

With knob and ratchet handles

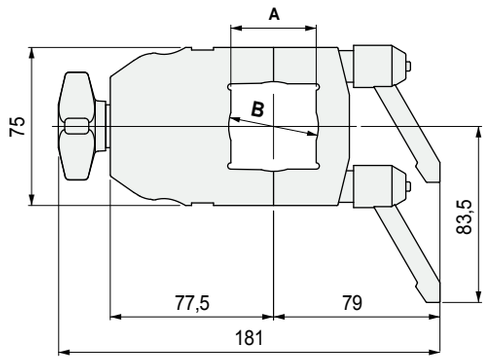

Square tube A mm	Round tube B mm	C mm	Rod dia. d1 mm	Code With handles and knob	Weight kg
40	42,4	52	20	**622423**	0,30

- Material: clamp in reinforced polyamide PA FV (black), tightening screws in austenitic stainless steel.
- Ratchet handle: handle in reinforced polyamide in PA FV (black), spindle in zinc plated steel.
- Max recommended tightening torque: 2 Kgm.
- Packaging: 8 pieces.

Part. S0199

Side mounting top bracket for round

Version with fixing holes for M8

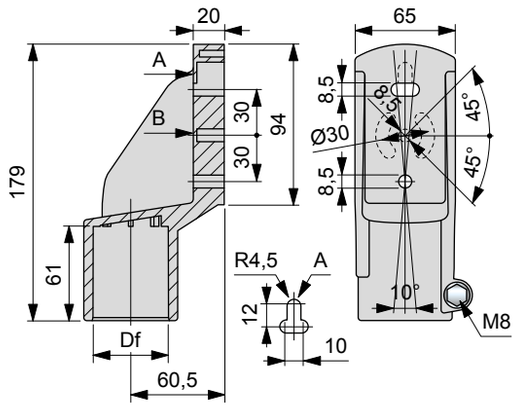

Version with fixing holes for M10

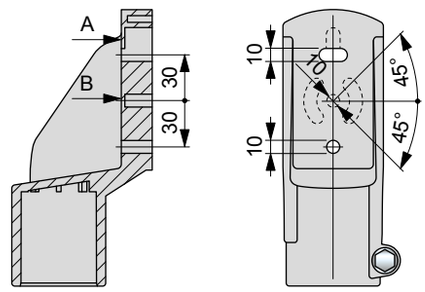

Tube dimensions mm	Bore Df mm	Bolts material	Code
Version with fixing holes for M8			
Ø48,3 (1"½)	Ø48,3	Austenitic stainless steel	**59171N**

- **Assembly** of Part. S0199 (with round tubes)

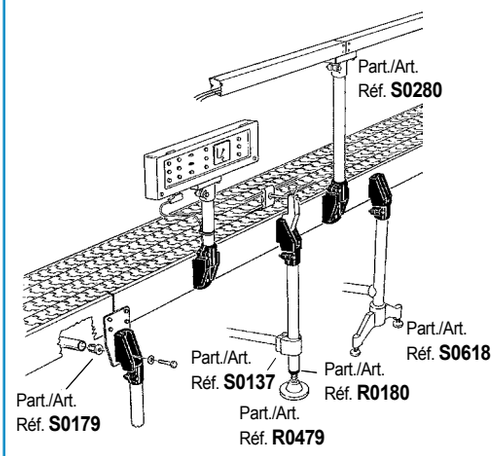

- **Assembly** of Part. S0199 (with square tubes)

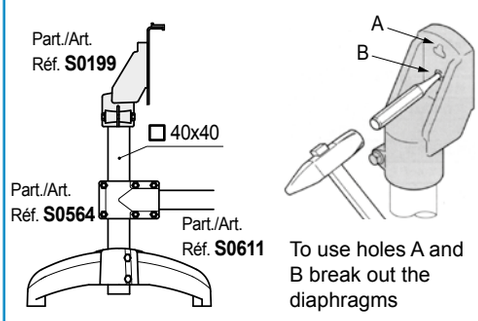

To use holes A and B break out the diaphragms

- **Deflection** of Part. S0199

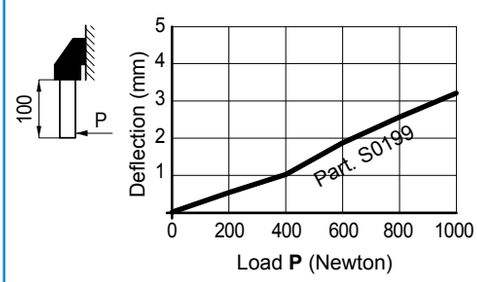

Notes

www.rexnord.com
Please contact our Application Engineers at +31 174 445 111 for assistance with product selection.

38716.Rexnord Catalog Marbett_6 - ENG S118-S161 blauw_v7.indd 123 18-09-18 08:18

Part. S0198

For round and square tubes

Bearing head

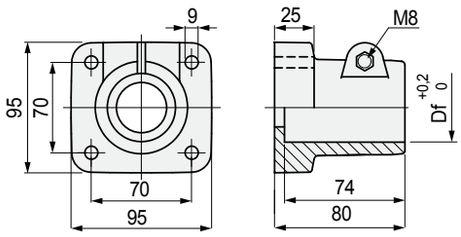

Tube dimensions mm	Bore Df mm	Bolts material	Code
Ø 48,3 (1"½)	Ø 48,3	Austenitic stainless steel	**59161**

- Material: reinforced polyamide PA FV (black).
- Weight: 0,30 Kg.
- Max recommended tightening torque: 2 Kgm.
- Packaging: 24 pieces.

• **Assembly** of Part. S0198 (with round tubes)

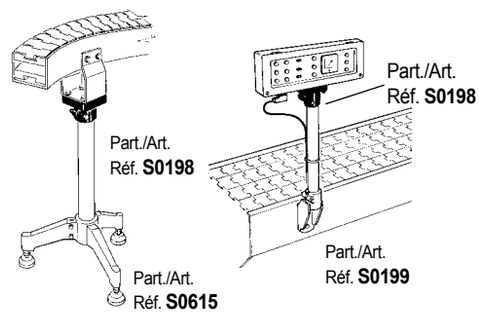

• **Assembly** of Part. S0198 (with square tubes)

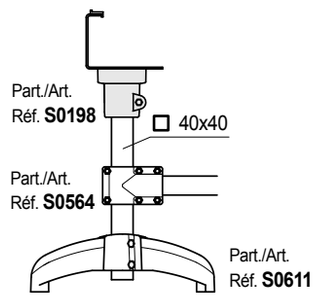

• **Deflection** of Part. S0198

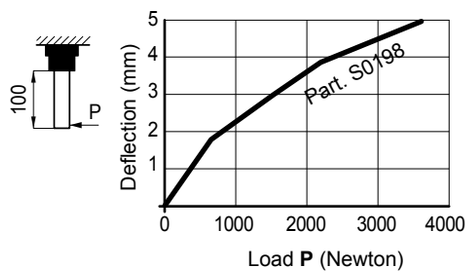

• **Sliding load**

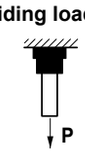

Part. S0198- Ø48,3 (P = 1900 N)
Part. S0198- ⌀ 38 (P = 4400 N)
Part. S0198- ⌀ 40 (P = 2300 N)

Tests performed at tightening torque: 2 Kgm

REXNORD

• **Assembly** of Part. S0280

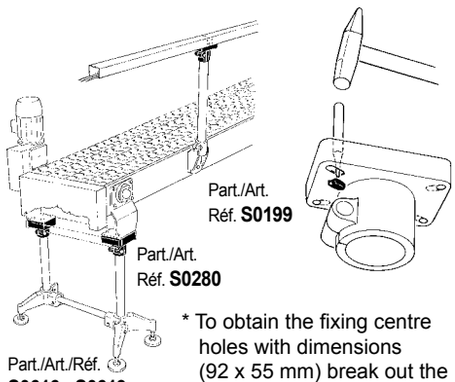

* To obtain the fixing centre holes with dimensions (92 x 55 mm) break out the thickness of diaphragm.

• **Deflection** of Part. S0280

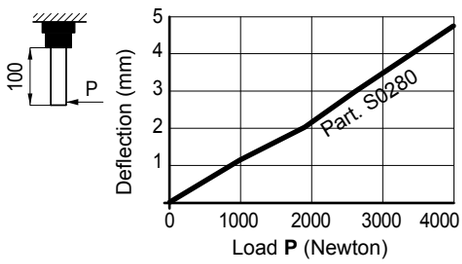

• **Sliding load**

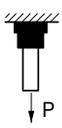

Part. S0280 (P = 1900 N)

Tests performed at tightening torque:
- 3,5 Kgm (for Part. S0280)

Bearing head

Part. S0280

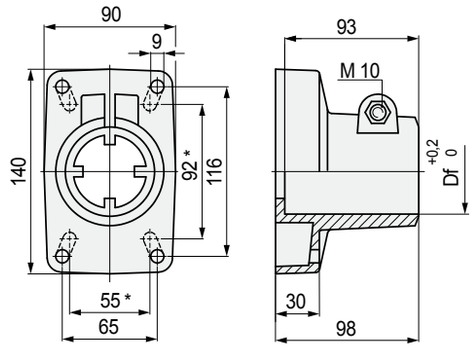

For round tubes

Tube dimensions mm	Bore Df mm	Code
Ø **48,3** (1"½)	48,3	**63503**
Ø **60,3** (2")	60,3	**66781**

- Material: head in reinforced polyamide PA FV (black).
- Bolts material: austenitic stainless steel.
- Weight: 0,40 Kg.
- Max recommended tightening torque: 3,5 Kgm.
- Packaging: 8 pieces.

Part. S0615

For round tubes

Support base (tripod)

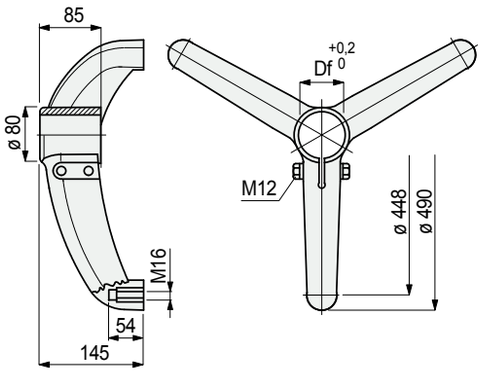

Tube dimensions mm	Bore dia. Df mm	Code
Bolts in austenitic stainless steel		
48,3 (1"½)	48,3	**624262**
50,8	50,8	**624272**
60,3 (2")	60,3	**621522**

- Material: support base in reinforced polyamide PA FV (black), brass threaded bushings.
- Weight: 1,45 Kg.
- Max recommended tightening torque: 3,6 Kgm.
- Packaging: 8 pieces.

• **Assembly** of Part. S0615

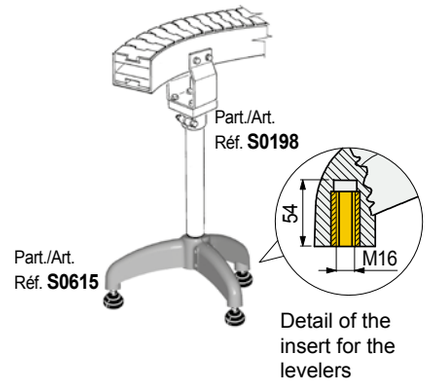

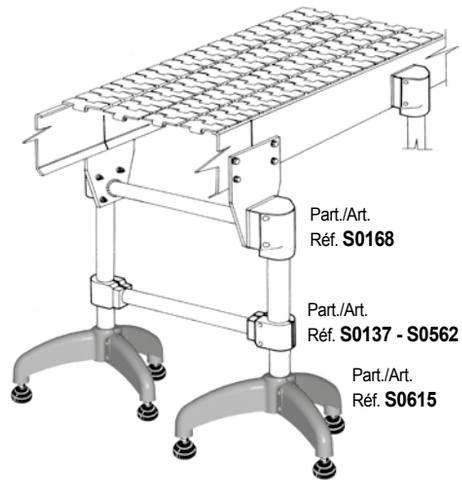

• **Sliding load**

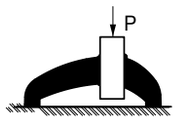

P = 8000 N

• **Max applicable load**

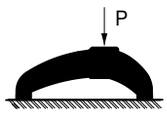

P = 10000 N

Tests performed at tightening torque: 3,6 Kgm

• **Types of levelers that can be used**

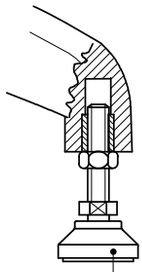

Part./Art./Réf. **R0098 - R0133 - R0323**

• **Assembly** of Part. S0618

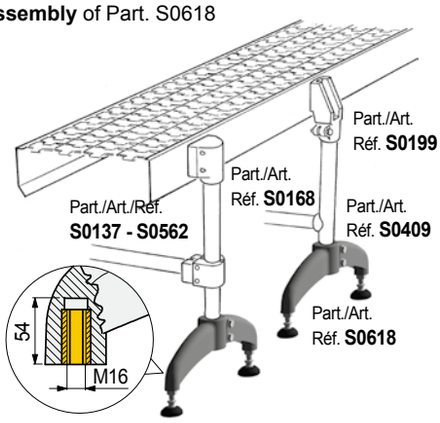

Detail of the insert for the levelers.

• **Sliding load**

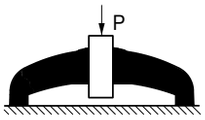

Part. S0618 (P = 8000 N)
Part. S0611 (P = 8000 N)

• **Max applicable load**

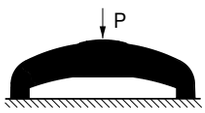

Part. S0618 (P = 9600 N)
Part. S0611 (P = 8000 N)

Tests performed at tightening torque:
3,6 Kgm (Part. S0618), 2,5 Kgm (Part. S0611)

• **Types of levelers that can be used**

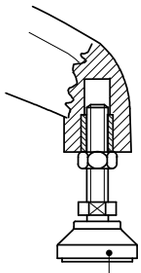

Part./Art./Réf. **R0098 - R0133 - R0323**

• **Assembly** of Part. S0611

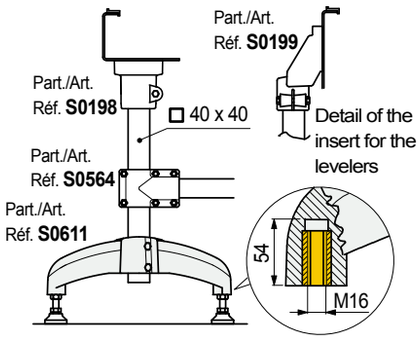

• Part. S0611 **available versions**

Closed version
Easy to clean

Open versionload

Support base (bipod)

Part. S0618

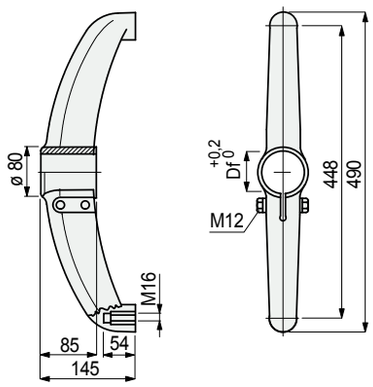

For round tubes

Tube dimensions mm	Bore dia. Df mm	Code
Bolts in austenitic stainless steel		
48,3 (1"½)	48,3	**624302**
50,8	50,8	**624312**
60,3 (2")	60,3	**624322**

- Material: support base in reinforced polyamide PA FV (black), brass threaded bushings.
- Weight: 1,05 Kg.
- Max recommended tightening torque: 3,6 Kgm.
- Packaging: 4 pieces.

Support base (bipod)

Part. S0611

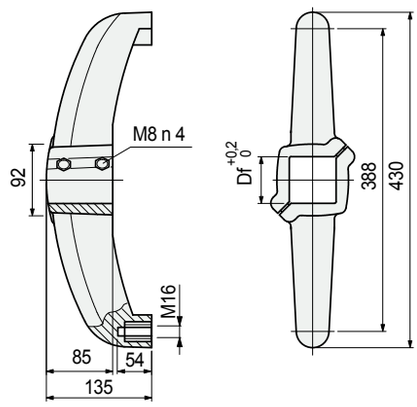

For square tubes

Tube dimensions mm	Bore Df mm	Code Open version
⧄ **50 x 50**	⧄ 50	**A**

- Material: support base in reinforced polyamide PA FV (black), bolts in austenitic stainless steel, tightening bushes in nickel plated brass, brass threaded bushings.
- Max recommended tightening torque: 2,5 Kgm.
- Weight: 0,9 Kg.
- Packaging: 4 pieces (8 half bases).

Part. S0619

For round tubes

Support base (bipod)

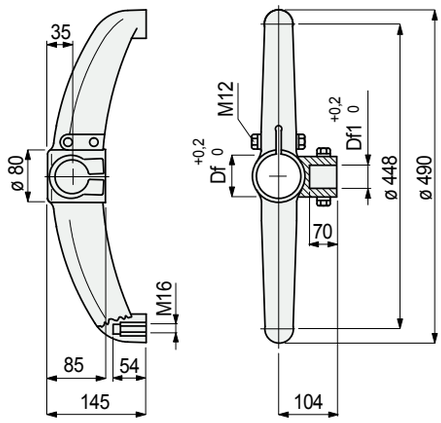

Vertical tube dia. mm	Horizontal tube dia. mm	Bore dia. Df mm	Bore dia. Df1 mm	Code
Bolts in austenitic stainless steel				
48,3 (1"½)	**42,4** (1"¼)	48,3	42,4	**624372**
48,3 (1"½)	**48,3** (1"½)	48,3	48,3	**692052**
Bolts in zinc plated steel				
48,3 (1"½)	**42,4** (1"¼)	48,3	42,4	**638852**

- Material: support base in reinforced polyamide PA FV (black), brass threaded bushings.
- Weight: 1,05 Kg.
- Max recommended tightening torque: 3,6 Kgm.
- Packaging: 4 pieces.

• **Assembly** of Part. S0619

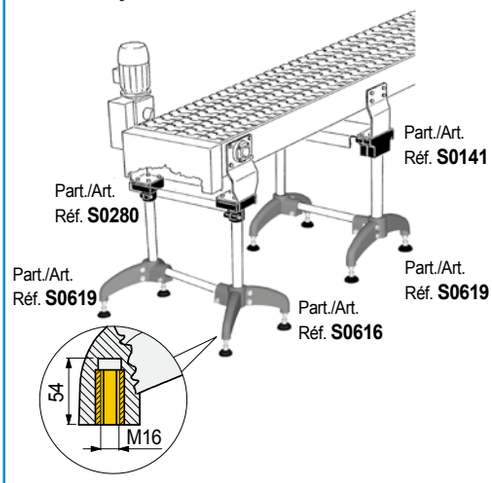

Detail of the insert for the levelers.

• **Sliding load**

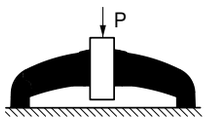

P = 8000 N.

• **Max applicable load**

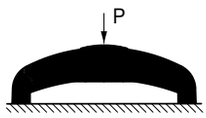

P = 8000 N.

• **Deflection**

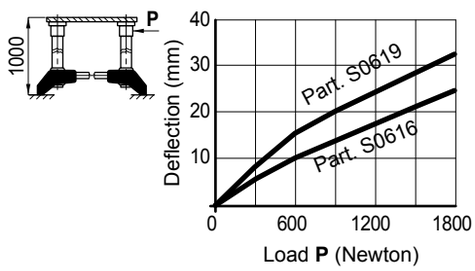

Tests performed at tightening torque: 3,6 Kgm

• **Types of levelers that can be used**

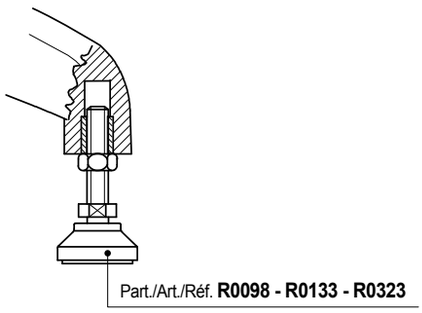

REXNORD

• **Assembly** of Part. S0618

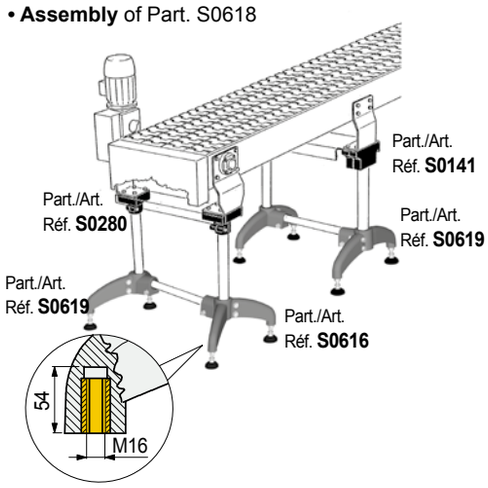

Detail of the insert for the levelers.

• **Sliding load**

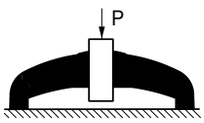

P = 8000 N.

• **Max applicable load**

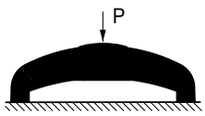

P = 8000 N.

• **Deflection**

Part. S0616 offers a better rigidity than Part. S0619

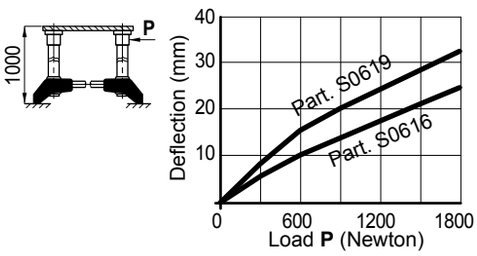

Tests performed at tightening torque: 3,6 Kgm

• **Types of levelers that can be used**

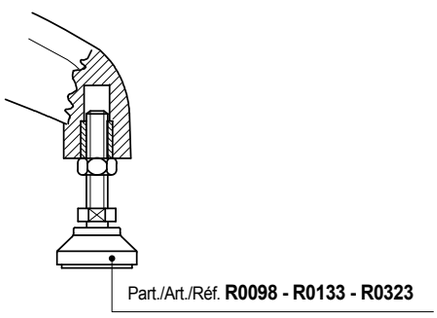

Support base (bipod)

Part. S0616

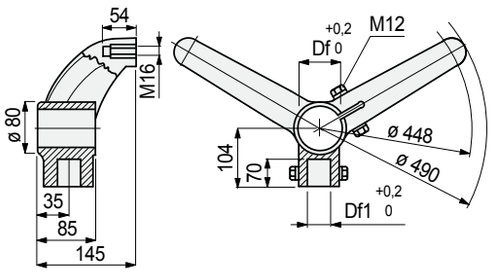

For round tubes

Vertical tube dia. mm	Horizontal tube dia. mm	Bore dia. Df mm	Bore dia. Df1 mm	Code
Bolts in austenitic stainless steel				
48,3 (1"½)	**42,4** (1"¼)	48,3	42,4	**624492**
48,3(1"½)	**48,3** (1"½)	48,3	48,3	**611203**

- Material: support base in reinforced polyamide PA FV (black), brass threaded bushings.
- Weight: 1,05 Kg.
- Max recommended tightening torque: 3,6 Kgm.
- Packaging: 4 pieces.

Part. S0562

For round tubes

Connecting Joints

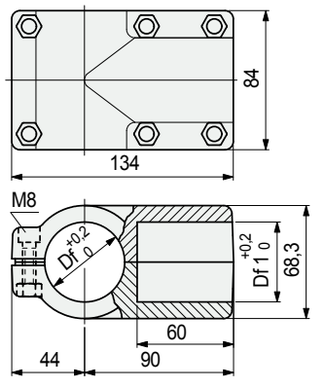

Vertical tube dia. mm	Horizontal tube dia. mm	Bore dia. Df mm	Bore dia. Df1 mm	Code
48,3 (1"½)	**48,3** (1"½)	48,3	48,3	**697861**

- Material: joint in reinforced polyamide PA FV (black). Tightening screws in austenitic stainless steel, nuts in nickel plated brass.
- Weight: 0,4 Kg.
- Max recommended tightening torque: 1,5 Kgm.
- Packaging: 8 pieces.

• **Assembly** of Part. S0562
Example of assembly with vertical tubes ø 33,7 mm

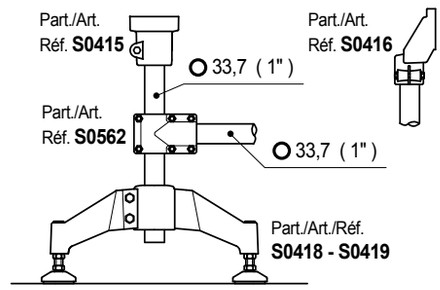

Example of assembly with vertical tubes ø 48,3 mm

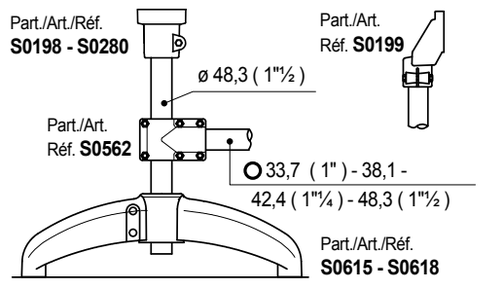

Part. S0563

For round tubes

Connecting Joints

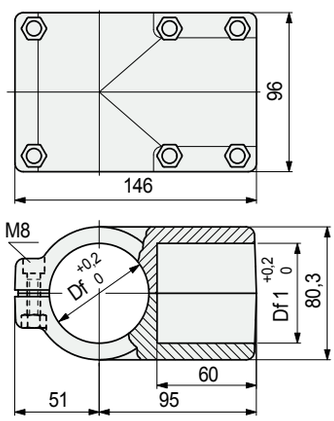

Vertical tube dia. mm	Horizontal tube dia. mm	Bore dia. Df mm	Bore dia. Df1 mm	Code
50,8	**50,8**	50,8	50,8	**669512**
60,3 (2")	**60,3** (2")	60,3	60,3	**697891**

- Material: joint in reinforced polyamide PA FV (black). Tightening screws in austenitic stainless steel, nuts in nickel plated brass.
- Weight: 0,5 Kg.
- Max recommended tightening torque: 1,5 Kgm.
- Packaging: 8 pieces.

• **Assembly** of Part. S0563
Example of assembly with vertical tubes ø 60,3 mm

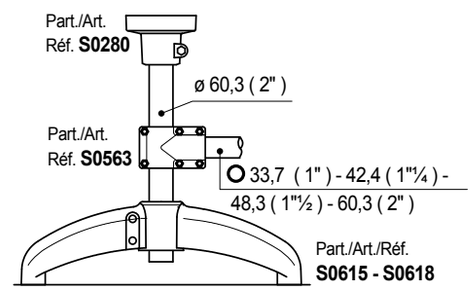

• **Sliding load resistance**

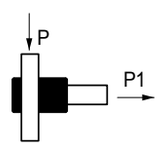

Part. S0562 (P = 2000 N) - (P1 = 3500 N)
Part. S0563 (P = 1500 N) - (P1 = 3000 N)

Tests performed at tightening torque: 1,5 Kgm

• **Assembly** of Part. S0564

Example of assembly with vertical tubes ⧄ 40 mm

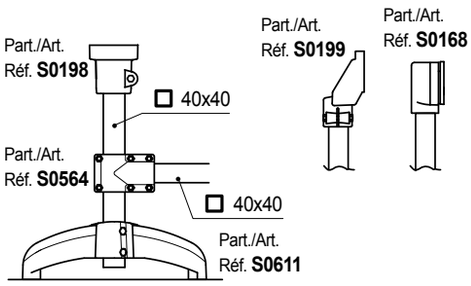

Connecting Joints

Part. S0564

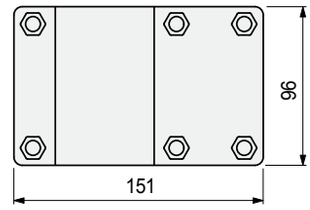

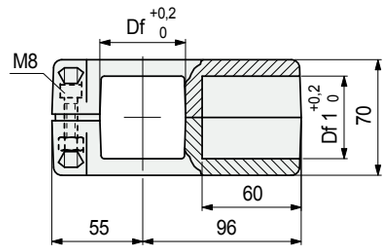

For square tubes

Tube dimensions mm	Bore Df mm	Bore Df1 mm	Code
⧄ **40 x 40**	⧄ 40	⧄ 40	**698541**
⧄ **50 x 50**	⧄ 50	⧄ 50	**698551**

- Material: joint in reinforced polyamide PA FV (black). Tightening screws in austenitic stainless steel, nuts in nickel plated brass.
- Weight: 0,5 Kg.
- Max recommended tightening torque: 1,5 Kgm.
- Packaging: 8 pieces.

Part. S0137

For round tubes

Connecting Joints

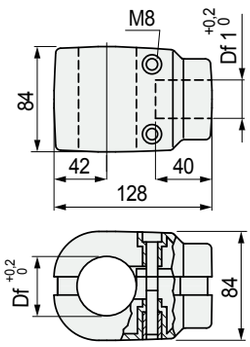

Vertical tube dia. mm	Horizontal tube dia. mm	Bore dia. Df mm	Bore dia. Df1 mm	Code
Ø **48,3** (1"½)	Ø **42,4** (1"¼)	48,3	42,4	**66813**
Ø **60,3** (2")	Ø **42,4** (1"¼)	60,3	42,4	**65020**

- Material: joint in reinforced polyamide PA FV (black). Tightening screws in austenitic stainless steel, tightening bushes in nickel plated brass.
- Weight: 0,44 Kg.
- Max recommended tightening torque: 1 Kgm.
- Packaging: 8 pieces.

• **Assembly** of Part. S0137
Example of assembly with vertical tubes ø 48,3 mm

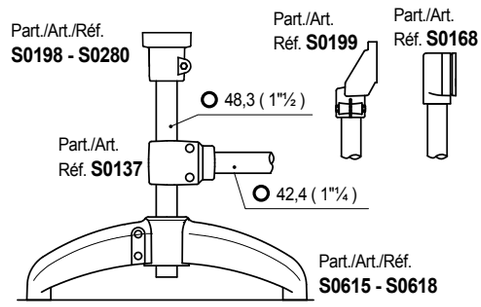

Example of assembly with vertical tubes ø 60,3 mm

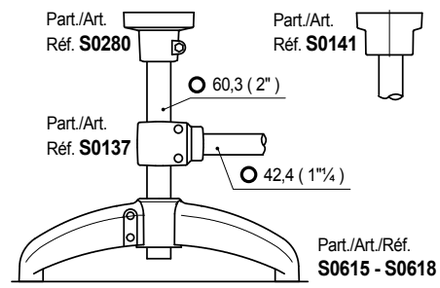

• **Deflection**

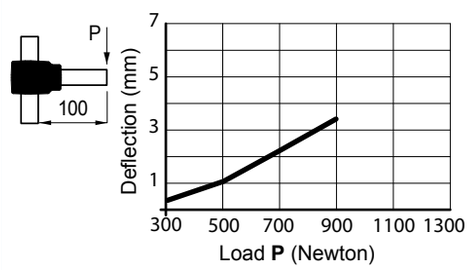

• **Sliding load resistance**

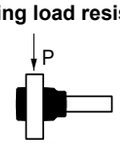

P = 1000 N

Tests performed at tightening torque: 1 Kgm

Notes

www.rexnord.com
Please contact our Application Engineers at +31 174 445 111 for assistance with product selection.

38716.Rexnord Catalog Marbett_6 - ENG S118-S161 blauw_v7.indd 133 18-09-18 08:18

Part. S0686

For tubes Ø 48,3 mm

Connecting Joints

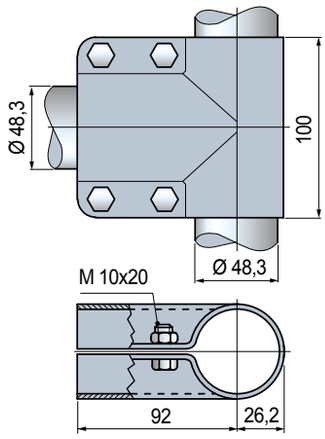

Tube dia. mm	State of supply	Code	Weight kg
48,3 (1”1/2)	With bolts	**684512**	0,64
	Without bolts	**684522**	

- Material: joint and bolts in austenitic stainless steel.
- Packaging: 4 pieces.

• **Assembly** Part. S0686

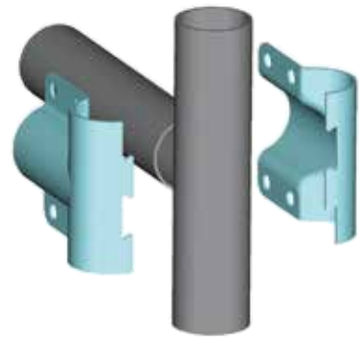

Side mounting top bracket

Part. S0685

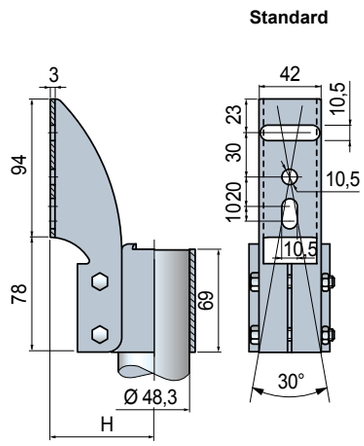

Tube dia. mm	Code Standard	H mm	Weight kg
48,3 (1”1/2)	**684502**	72	0,70

- Material: top bracket and bolts in austenitic stainless steel.
- Packaging: 4 pieces.

Part. S0342

Assembly kit for photocells or sensors

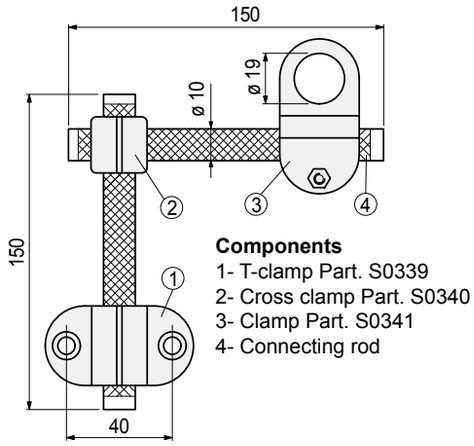

Code	Weight kg
605153N	0,14

- Material: clamps in reinforced polyamide PA FV (black), tightening bolt and connecting rods in austenitic stainless steel.
- Max recommended tightening torque : 0,5 Kgm.
- Packaging: 24 Kit.

• **Assembly** Part. S0342

Dia. 18 mm photocells or sensors

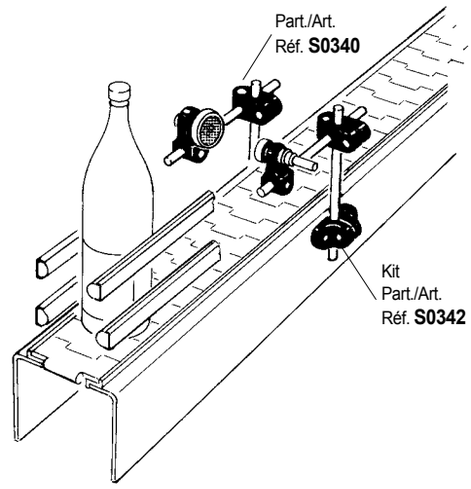

Part. S0341

Clamp for photocells or sensors

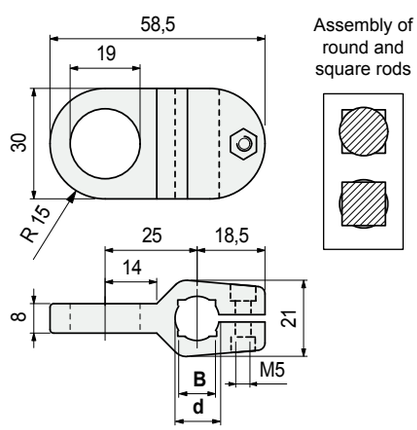

Tightening bolt material	Rod dia. d mm	Square rod B mm	Code	Weight kg
Austenitic stainless steel	**12**	**10**	**68395**	0,02

- Material: clamp in reinforced polyamide PA FV (black).
- Max recommended tightening torque: 0,5 Kgm.
- Packaging: 24 pieces.

• **Assembly** Part. S0341

Dia. 18 mm photocells or sensors

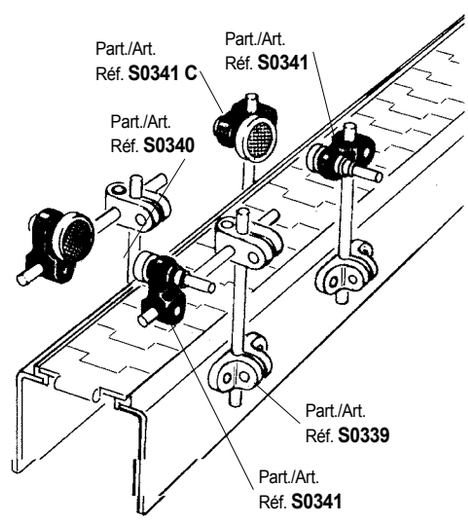

Notes

www.rexnord.com
Please contact our Application Engineers at +31 174 445 111 for assistance with product selection.

38716.Rexnord Catalog Marbett_6 - ENG S118-S161 blauw_v7.indd 137 18-09-18 08:18

Part. S0372

Universal clamp for photocells or reflectors

- Can be fitted in positions A - B - C

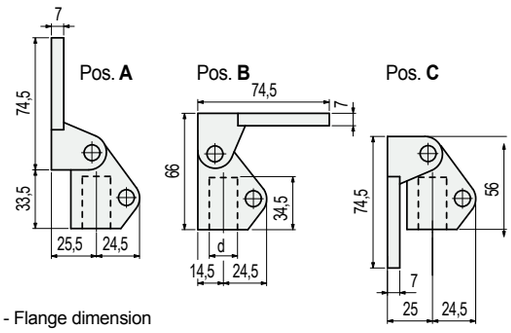

- Flange dimension

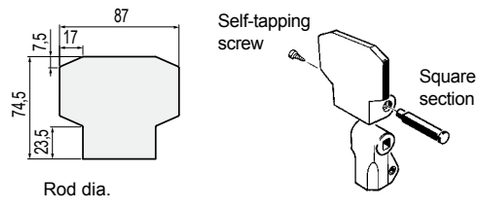

Rod dia. d mm	Code	Weight kg
14	61786	0,12
16	61806	

- Material: clamp in reinforced polyamide PA FV (black), tightening bolt in austenitic stainless steel.
- State of supply: already assembled in position A
- Max recommended tightening torque: 1,5 Kgm.
- Packaging: 24 pieces.

• Suitable photocell types

- Omron / E3S - R

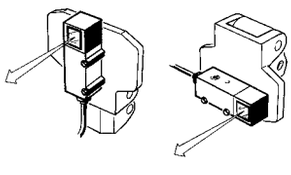

- Sick / WL 36

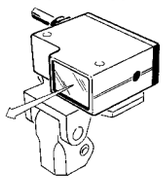

- Omron / E3A2

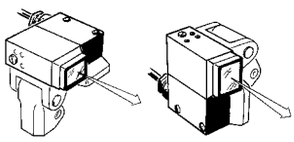

- Datalogic / RT 7

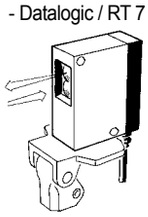

- Leuze / Rk 18

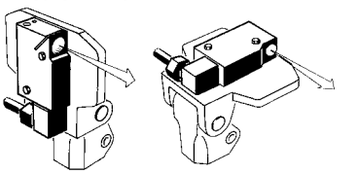

• Suitable reflector types

Diell / RL 110

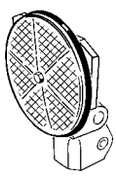

Sicest / RF - 230

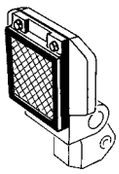

Diell / RL 113
Datalogic / R2

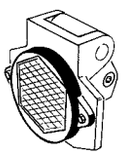

• Assembly Part. S0372

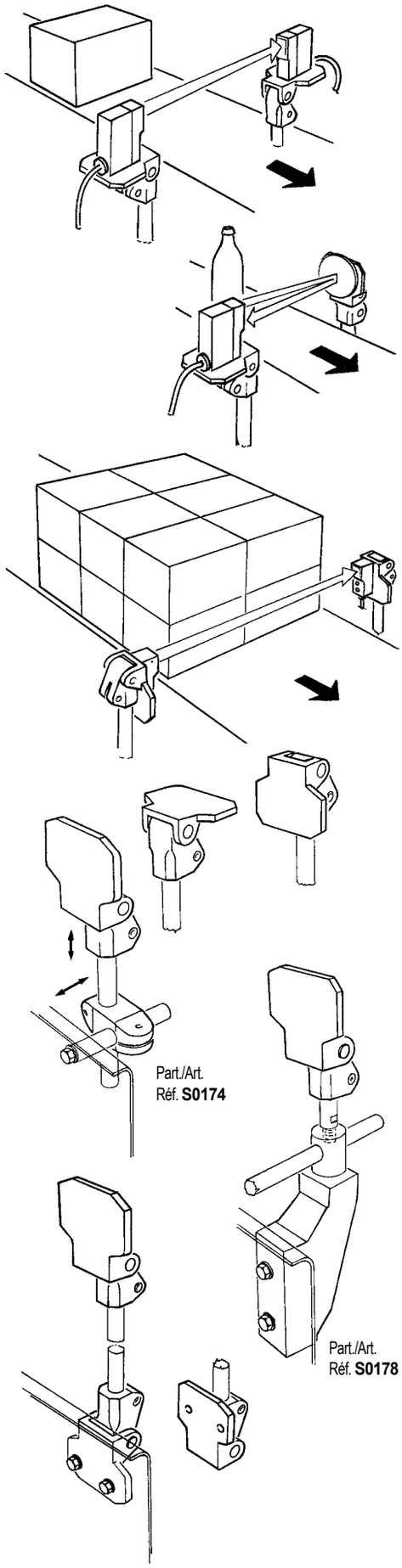

REXNORD

Part. S0518

- **Use**
  Contact lever ideal to mechanically check the presence of products. Works in conjuction with photocells or magnetic sensor (proximity sensor).

- **Versions**
  The control contact lever is supplied in three versions according to the type of sensor to be used.

1) With hole and metal insert (for magnetic sensor).

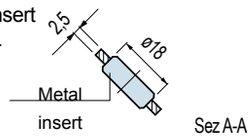

2) Without hole

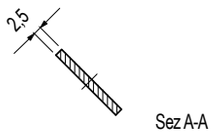

- Assembly on the shaft.
  The control contact lever can be axially fixed on the shaft with a metal collar and a grub screw.

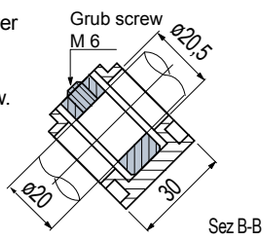

- **Assembly** of Part. S0518 (with insert for magnetic sensor)
  In regular conditions the control contact lever is high and magnetic proximity sensor does not detect the presence of magnetic insert.

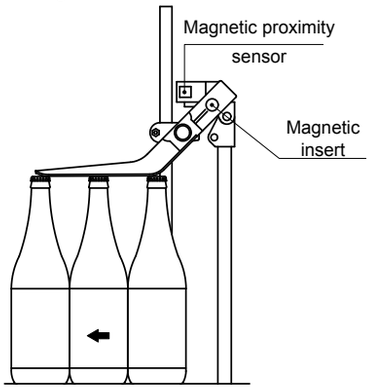

In case of problem (example bottle downing) the control contact lever lowers and magnetic sensor detects the presence of magnetic insert and stops the conveyor.

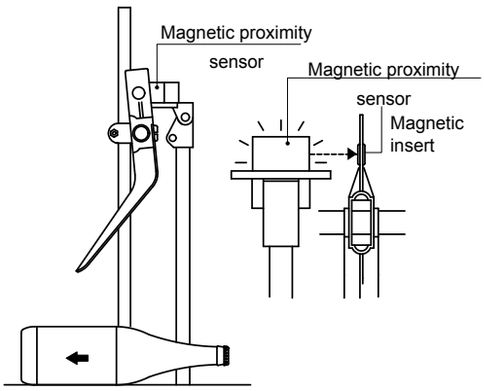

Control contact lever

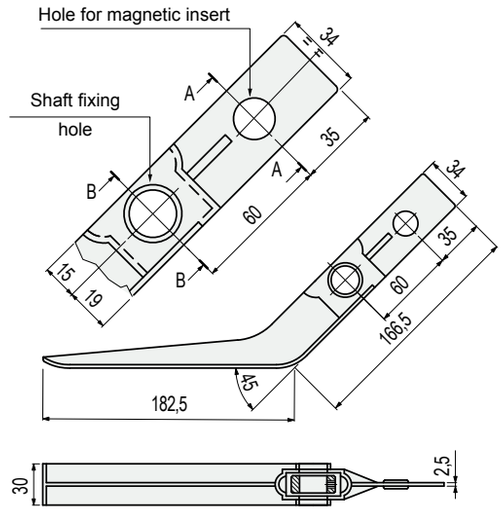

Version	Code	Weight kg
With hole and metal insert	**642951N**	0,1
Without hole	**696021N**	

- Material: lever in polypropylene (black), insert (for magnetic sensor) in ferritic stainless steel, locking spacer (for shaft fixing) in zinc plated steel.
- Packaging: 24 pieces.

Part. S0337

270° hinge

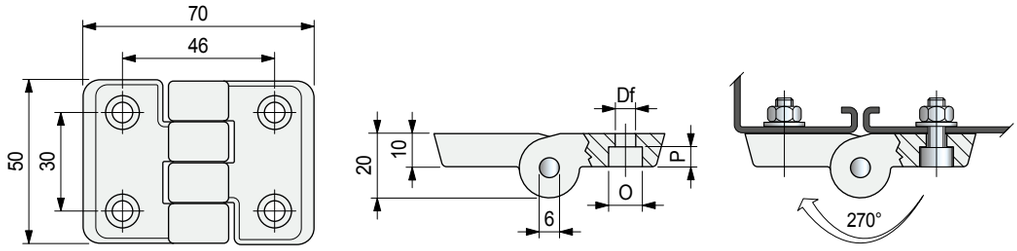

Fixing screws dia.	Code	ø Df mm	O mm	P mm	Weight gr	Packaging No. of pieces
M 6	**67023**	6,5	10,5	6	55	24
M 8	**60334**	8,5	13,5	4		

- Material: hinge in reinforced polyamide PA FV (black). Pin in ferritic stainless steel.
- Max recommended tightening torque: 0,5 Kgm.
- Packaging: 12 pieces

Part. S0260

170° hinge

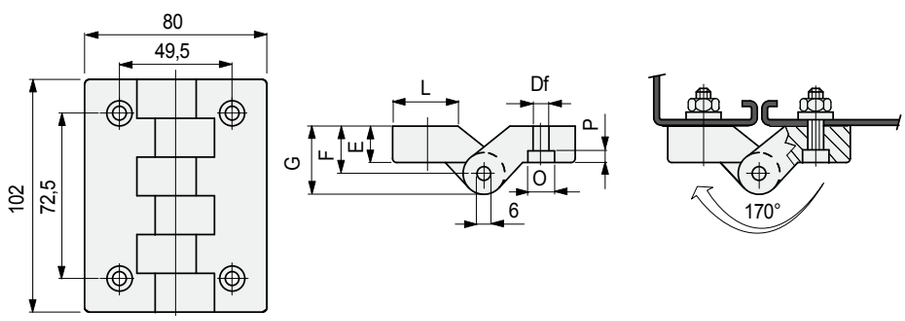

E mm	Fixing screws dia.	Code	ø Df mm	F mm	G mm	O mm	P mm	L mm	Weight gr	Packaging No. of pieces
11,5	M 6	**65021**	6,5	14,5	23,5	10,5	6	35	110	20

- Material: hinge in polyamide PA (black). Pin in austenitic stainless steel.
- Max recommended tightening torque: 0,5 Kgm (with M6 screws), 1 Kgm (with M8 screws).
- Packaging: 12 pieces

Notes

www.rexnord.com
Please contact our Application Engineers at +31 174 445 111 for assistance with product selection.

38716.Rexnord Catalog Marbett_6 - ENG S118-S161 blauw_v7.indd 141 18-09-18 08:18

Part. S0272

Lock

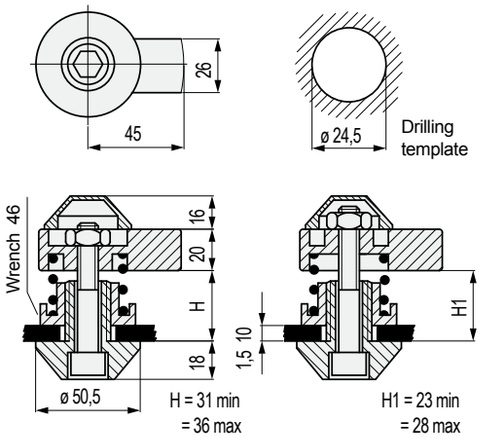

Assembly drawing No. 1

Assembly drawing No. 2

Code	Weight kg
66771	0,2

- Material: body in reinforced polyamide PA FV (black), bolts, nuts and spring in austenitic stainless steel.
- Use: closure of doors in machines for foodindustry (washing, bottling, etc).
- Packaging: 12 pieces.
- Operation with hexagonal bar 10 key.
- Key turn: 360 right or left.
- Assembly instructions:
  Assembly lock as shown in assembly diagram 1, when the size X (Fig. 1) is suitable for assembly distance between 31 ÷ 36 mm. When X (Fig. 1) is between 23 ÷ 28 mm, follow assembly type 2.

• **Assembly** Part. S0272

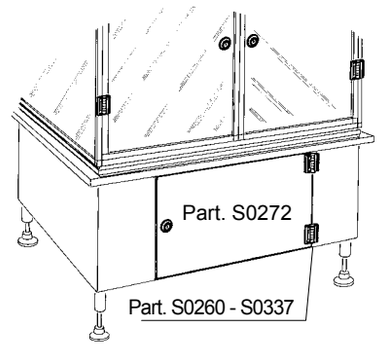

• **Fig. 1**

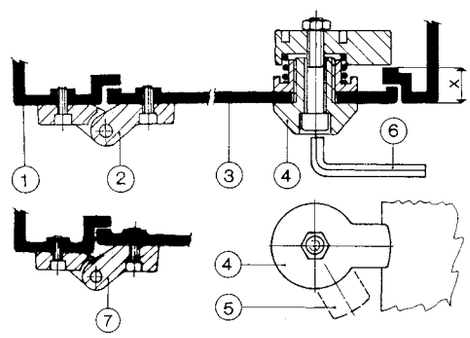

1 - Machine structure.
2 - Hinge Part. S0260 - S0337.
3 - Door.
4 - Lock Part. S0272 (in closed position).
5 - Lock Part. S0272 (in open position).
6 - Lock key (with exagonal 10 wrench).
7 - Hinge Part. S0260 (for misalligned mounting surfaces).

Ratchet handle clamping

Part. S0303

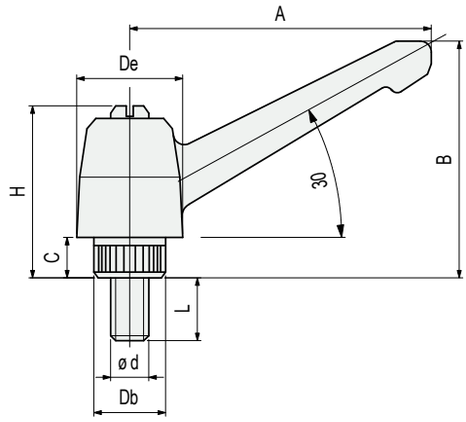

Bore dia. d	A mm	B mm	C mm	L mm	H mm	Db mm	De mm	Code
M8	55	51	10	25	37	15	20	**60872**

- Material: handle in reinforced polyamide in PA FV (black), spindle in austenitic stainless steel.
- Packaging: 12 pieces.

Part. S0182

Tightening knob

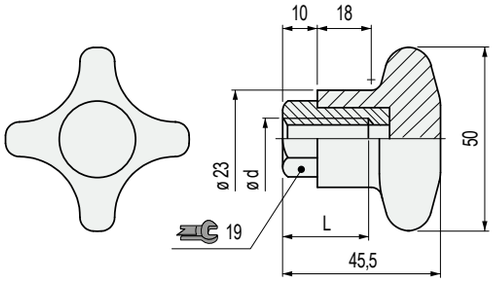

Thread dia. d	Code	L mm
Threaded insert in austenitic stainless steel		
M8	**649961N**	23
Threaded insert in nickel plated brass		
M10	**54911**	28

- Material: knob in reinforced polyamide PA FV (black), threaded insert in nickel plated brass.
- Max recommended tightening torque: 2,5 Kgm (manual tightening), 4 Kgm (tightening with wrench). For high tightening torques apply a 19 mm wrench to the hexagon of the insert.
- Packaging: 12 pieces.

Part. S0183

Tightening knob

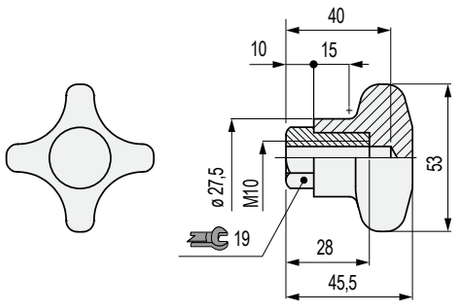

Code
54921

- Material: knob in reinforced polyamide PA FV (black), threaded insert in nickel plated brass.
- Max recommended tightening torque: 2,5 Kgm (manual tightening), 4 Kgm (tightening with wrench). For high tightening torques apply a 19 mm wrench to the hexagon of the insert.
- Packaging: 12 pieces.

Tightening knob

Part. S0185

Version with hexagonal key

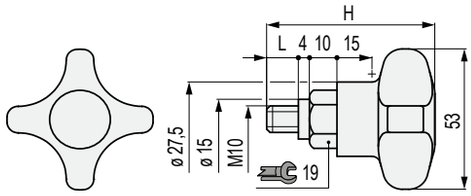

Material knob	L mm	Code	H mm
Version with hexagonal key			
Reinforced Polyamide PA FV (black)	**11**	**53081**	61

- Use: version with knob in reinforced Polypropylene PP FV (grey), gives a better resistance to chemical agents.
- Material: knob in reinforced polyamide PA FV (black), (threaded insert in nickel plated brass).
  With knob in reinforced Polypropylene PP FV (threaded insert in austenitic stainless steel).
- Max recommended tightening torque: 2,5 Kgm (manual tightening), 4 Kgm (tightening with wrench).
  For high tightening torques apply a 19 mm wrench to the hexagon of the insert.
- Packaging: 12 pieces.

38716.Rexnord Catalog Marbett_6 - ENG S118-S161 blauw_v7.indd 145 18-09-18 08:18

Part. S0567

End transfer module (with lip)

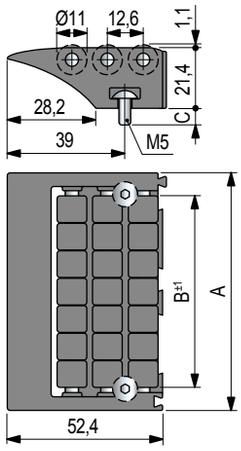

Code

A mm	B mm	C mm	Frame and Rollers in acetal Rex-HP (dark grey)
85	67,6	Without screws	**688792**
		13	**688812**
115	97	Without screws	**687382**
		13	**677322**

- Material: roller pins and screws in austenitic stainless steel.
- Modularity: snap-on assembly with Part. S0568.
- Packaging: 10 pieces.
- Weight: A=85: 0,09, A=115: 0,11.

Part. S0672

End transfer module (with lip)

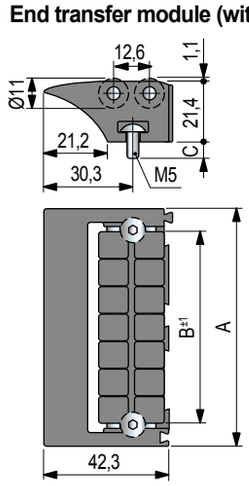

Code

A mm	B mm	C mm	Frame and Rollers in acetal Rex-HP (dark grey)
85	67,6	Without screws	**687412**
115	97	Without screws	**687432**

- Material: roller pins and screws in austenitic stainless steel.
- Modularity: snap-on assembly with Part. S0568.
- Packaging: 10 pieces.
- Weight: A=85: 0,09, A=115: 0,11.

• **Fixing**
Screws are tightened with an hexagon key inserted between rollers.

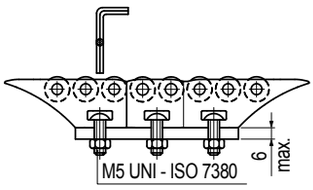

• **Head to tail transfer** of small and light products.

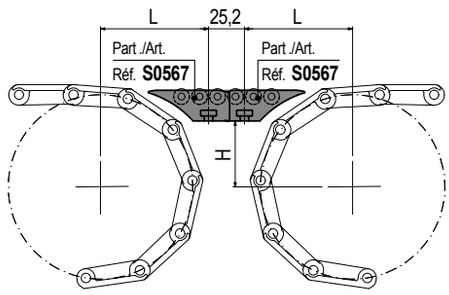

L and H see page S0164.

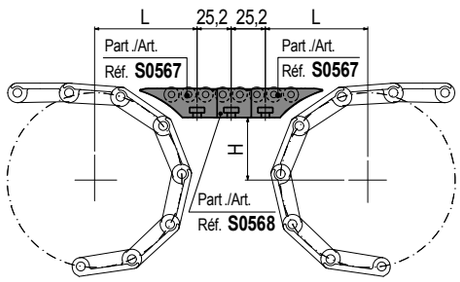

L and H see page S0164.

Compact version.

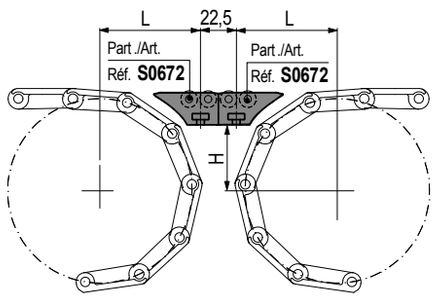

L and H see page S0166.

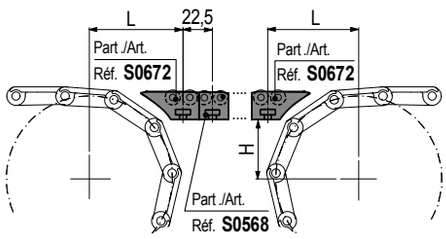

L and H see page S0166.

• Head to tail transfer of big and heavy products.

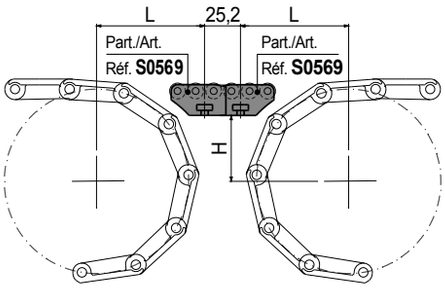

L and H see page S0164.

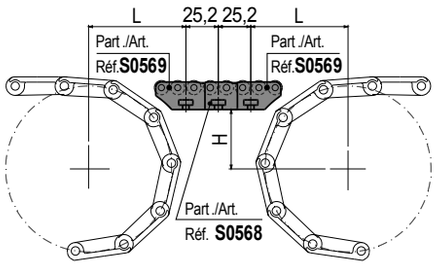

L and H see page S0164.

• 90º transfer of small and light products.

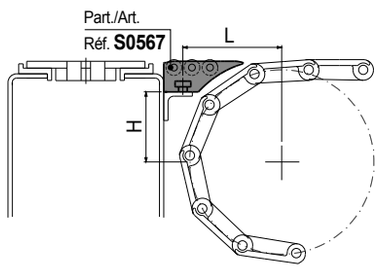

L and H see page S0164.

Compact version.

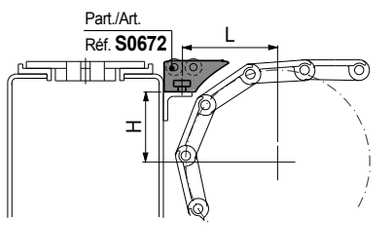

L and H see page S166.

• 90º transfer of big and heavy products.

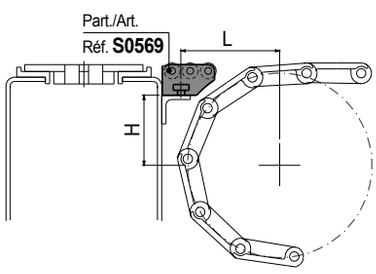

L and H see page S0164.

End transfer module

Part. S0569

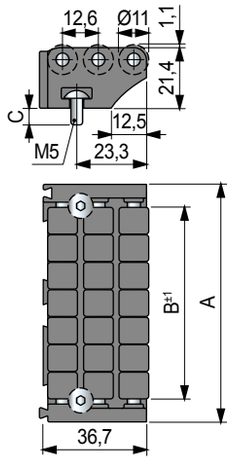

Code

A mm	B mm	C mm	Frame and Rollers in acetal Rex-HP (dark grey)
85	67,6	Without screws	**605922**
		13	**601092**
115	97	Without screws	**687392**

- Material: roller pins and screws in austenitic stainless steel.
- Modularity: snap-on assembly with Part. S0568.
- Packaging: 10 pieces.
- Weight: A=85: 0,09, A=115: 0,10.

End transfer module

Part. S0568

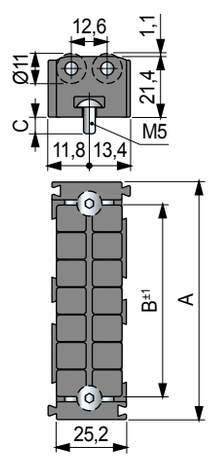

Code

A mm	B mm	C mm	Frame and Rollers in acetal Rex-HP (dark grey)
85	67,6	Without screws	**605912**
		13	**601082**
115	97	Without screws	**687402**

- Material: roller pins and screws in austenitic stainless steel.
- Modularity: snap-on assembly with Part. S0567 - S0569 - S0672.
- Packaging: 20 pieces.
- Weight: A=85: 0,08, A=115: 0,10.

Modular transfer roller plate

846 Roller Transfer Plates
Features Rexnord HP™ acetal frame and two rows of Rexnord XLBP rollers for extra low friction.
10604101 ROL-PLT 846 LIP2 L85MM XLBP
10604102 ROL-PLT 846 LIP2 L115MM XLBP

847 Roller Transfer Plates
Features Rexnord HP acetal frame and three rows of Rexnord XLBP rollers for extra low friction.
10604103 ROL-PLT 847 LIP3 L85MM XLBP
10604104 ROL-PLT 847 LIP3 L115MM XLBP

848 Roller Transfer Plates
Features Rexnord HP acetal frame and five rows of Rexnord XLBP rollers for extra low friction.
10604105 ROL-PLT 848 LIP5 L85MM XLBP
10604116 ROL-PLT 848 LIP5 L115MM XLBP

849 Roller Transfer Plates
Features Rexnord HP acetal frame and two rows of Rexnord XLBP rollers for extra low friction.
10604117 ROL-PLT 849 END L85MM XLBP
10604118 ROL-PLT 849 END L115MM XLBP

850-865 Assembly Bar
Reinforced polyamide bar allows for modular assembly of roller transfer plates with widths of 85 milimeter and higher.
Metric code nr. S0850646733
Inch code nr. S0865646743

864 Profile for Compact Transfer Plates
Allows for modular assembly when used in combination with the 850 assembly bar and 846 transfer plates.
Code nr. S0864646663

Notes

www.rexnord.com

Please contact our Application Engineers at +31 174 445 111 for assistance with product selection.

38716.Rexnord Catalog Marbett_6 - ENG S118-S161 blauw_v7.indd 149 18-09-18 08:19

Part. S0905

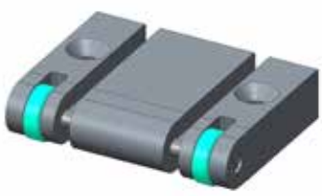

Dynamic “Nose - Over” bar standard profile

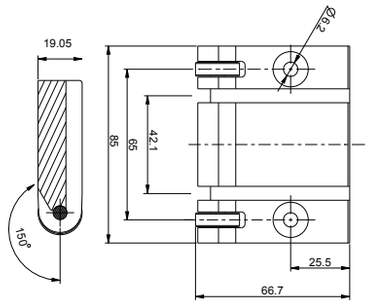

Description	Code	Weight mm
Nose Over Dyn 905 L85MM M6 PT	**10603961**	0,18

- Material: Polyethylene ULF 500.000 (brown red).
- Packaging: 1 pieces.

• **Modular nose - over bar standard**
N2 M6 socked flat head cap screws UNI 5933.

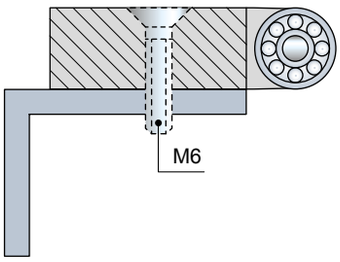

REXNORD

Part. S0905

• **Assembly** of Part. S0905

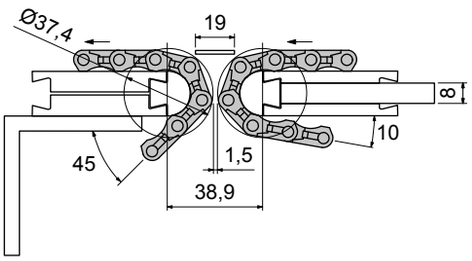

• **Assembly of "Nose - Over" bar with 8 mm plate**

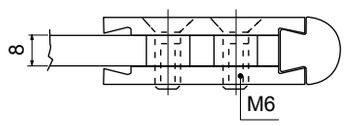

Modular "Nose - Over" bar low profile

Version L = 152,4 e 170

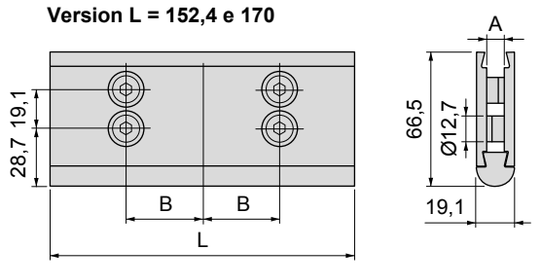

Version L = 255

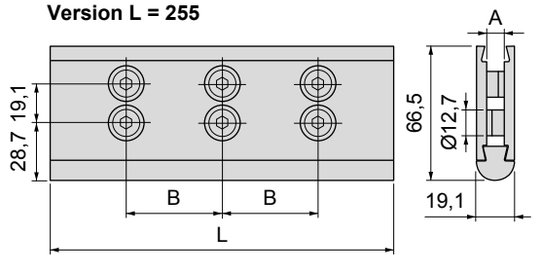

L mm	B mm	Hardware	A	Code	Weight Kg
152,4	38,1	M6	8 mm	**10483148**	0,18
		1/4-20	0,25 inch	10483150	
170	42,5	M6	8 mm	**10476256**	0,20
255	85	M6	8 mm	**10476257**	0,31

- Material: clamp in polyamide PA (black), sliding profile in ULF, steel hardware.
- Packaging: 1 pieces.

Part. S0905

• **Assembly** of Part. S0905

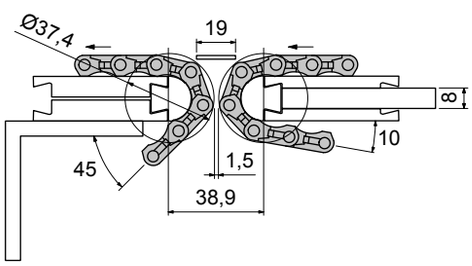

• **Modular nose - over bar standard**
N4 M8 socked flat head cap screws UNI 5933.

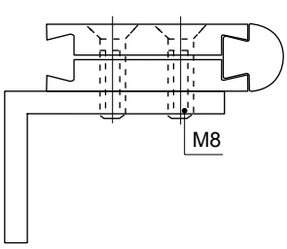

• **Use** of Part. S0905
Head to tail transfer with MatTop® chain Series 1500.

Modular "Nose - Over" bar standard profile

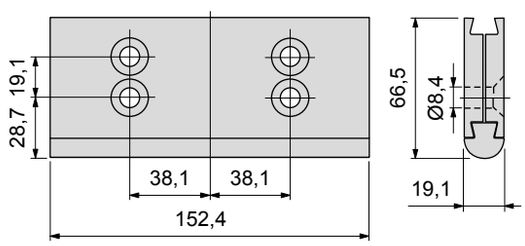

Code	Weight mm
10483148	0,18

- Material: clamp in polyamide PA (black), sliding profile in ULF.
- Packaging: 1 pieces.

Part. S0612

Split shaft collar (with round bore)

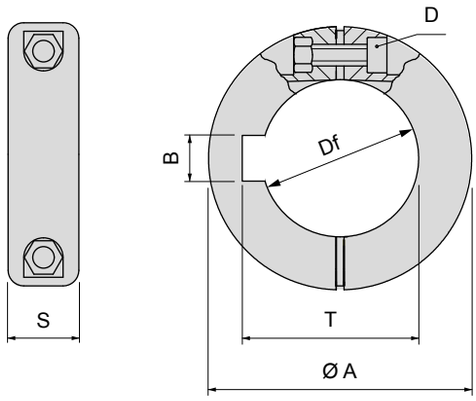

Bore dia. mm	Bore dia. inch	Ø A mm	S mm	B mm	T mm	D	Code	Weight kg
Without seat keyway								
-	1/2"	30	11,7	-	-	M4	**655072**	-
16	5/8"	35	11,7	-	-	M4	**655092**	-
-	3/4"	40	14	-	-	M4	**655102**	-
20	-	40	14	-	-	M4	**614722**	0,019
25	-	45	14	-	-	M4	**619452**	0,022
30	-	50	16	-	-	M4	**640602**	0,026
-	1 1/4"	50	16	-	-	M4	**608463**	-
-	1 1/2"	63,5	18	-	-	M5	**611283**	-
40	-	63,5	18	-	-	M5	**686232**	0,040
With seat keyway								
25	-	45	14	8	28,3	M4	**683812**	0,022
-	1"	45	14	6,4	28,58	M4	**655112**	-
30	-	50	16	8	33,3	M4	**614732**	0,026
-	1 1/4"	50	16	6,4	34,98	M4	**655122**	-
-	1 7/16"	63,5	18	9,58	41,02	M5	**605043**	-
-	1 1/2"	63,5	18	9,58	42,65	M5	**655132**	-
40	-	63,5	18	12	43,3	M5	**615012**	0,040

- Material: collar in reinforced polyamide PA FV (black), tightening bolt in austenitic stainless steel.
- Max recommended tightening torque: 0,3 Kgm.
- Packaging: 24 pieces.

• **Assembly of** Part. S0612 (with round bore)

- With sprockets

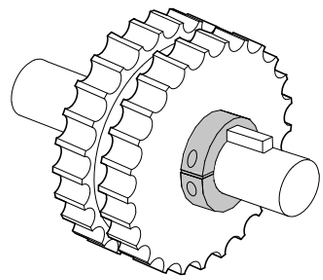

- With idler wheels

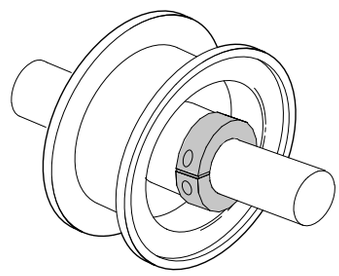

- With rollers

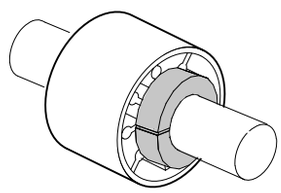

- With side brackets

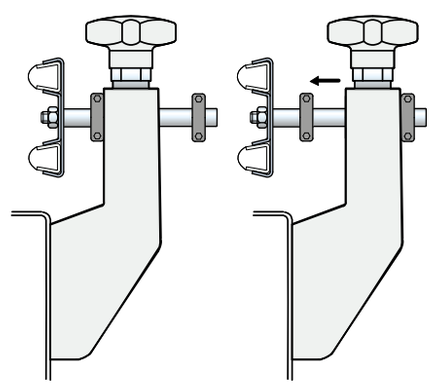

REXNORD

• **Assembly** Part. S0612 (with square bore)

- Ideal for the locking of MatTop® sprockets.
- Version in reinforced Polyamide PA FV, gives better resistance at high temperatures.
- Version in reinforced Polypropylene PP FV, gives better resistance against chemical agents.

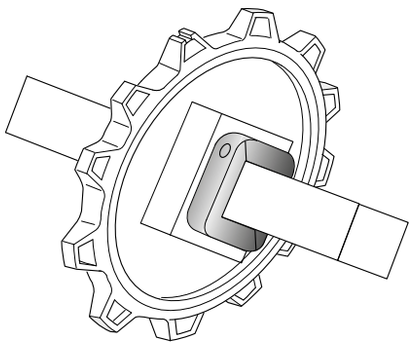

Split shaft collar (with square bore)

Part. S0612

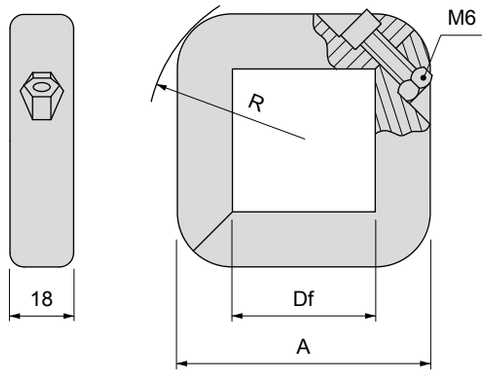

Square bore Df mm	Square bore Df inch	Material Polyamide PA FV (black) Code	A mm	R mm
Version with metric bore				
40x40	-	**692952**	72	44
Version with inch bore				
-	1 1/2"	**692942**	72	44
-	2 1/2"	**692972**	95	58

- Material tightening bolt: austenitic stainless steel.
- Max recommended tightening torque: 0,5 Kgm.
- Packaging: 24 pieces.

Part. S0075

Winding tensioner

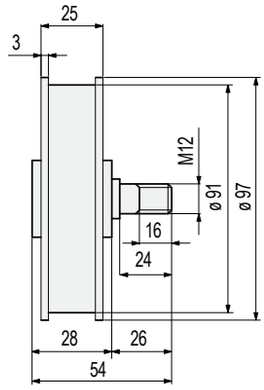

Load gr.	Winding travel mm	Direction of travel	Code
0÷4000	2500	right	**672642N**
		left	**672652N**

- Noise reduction.
* = Unwinding the spring, the load is almost constant 10/20% (loss of load).
- Material: pulley in reinforced polyamide PA FV (black), pin in brass.
- Packaging: 4 pieces.

• **Assembly of** Part. S0079 - S0075

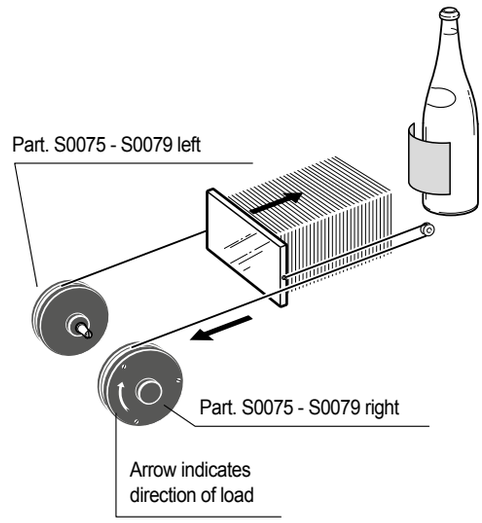

Part. S0837

Technical information

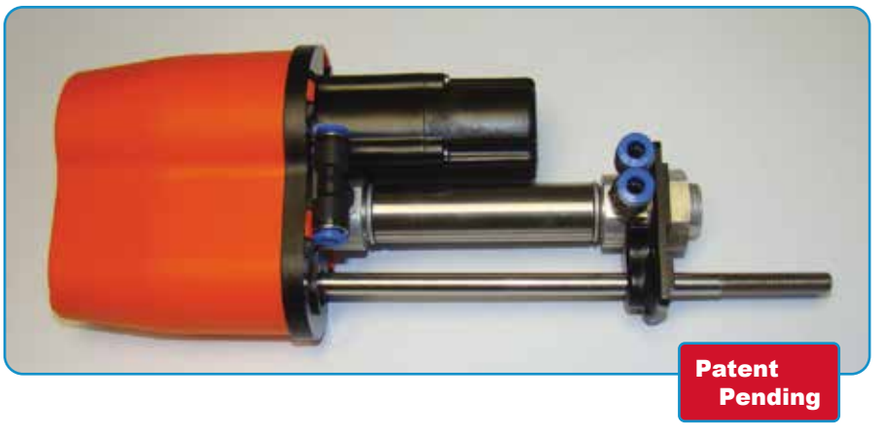

Code	Weight kg
640783	0,68

- Operating unit SGA™, on the positioning roller and fastening support in black acetalic POM.
- Safety cover in orange Polypropylene PP.
- Stop plate, rod clamp and M22 nut in stainless steel.
- Quick coupling in plastic.
- Mini-cylinder ISO 6432.
- Packaging: 4 pieces.

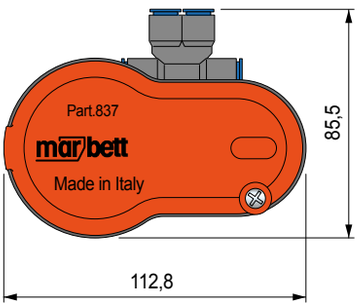

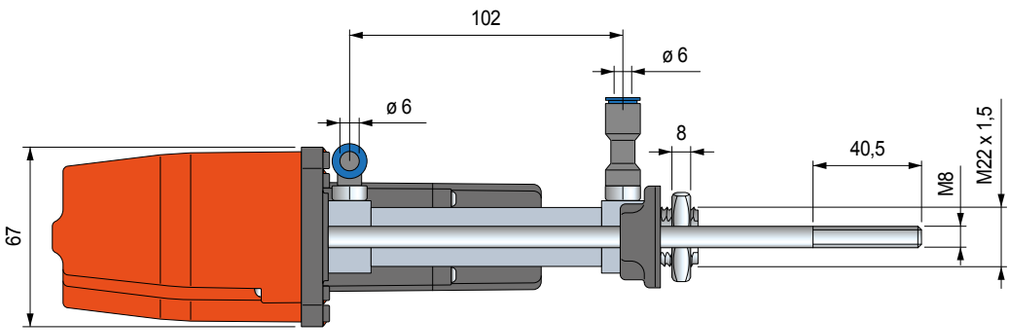

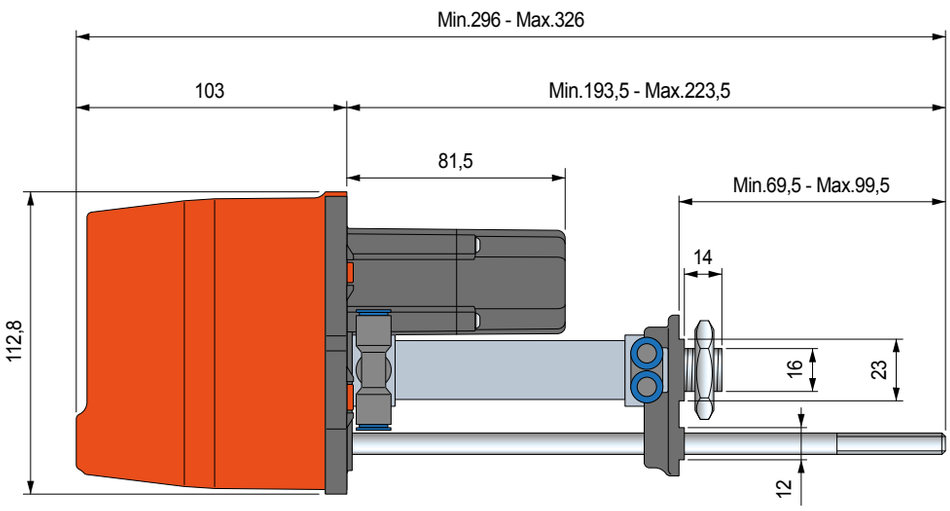

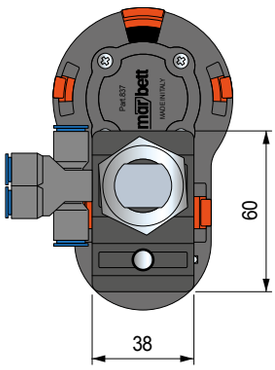

REXNORD

Component's description

Part. S0837

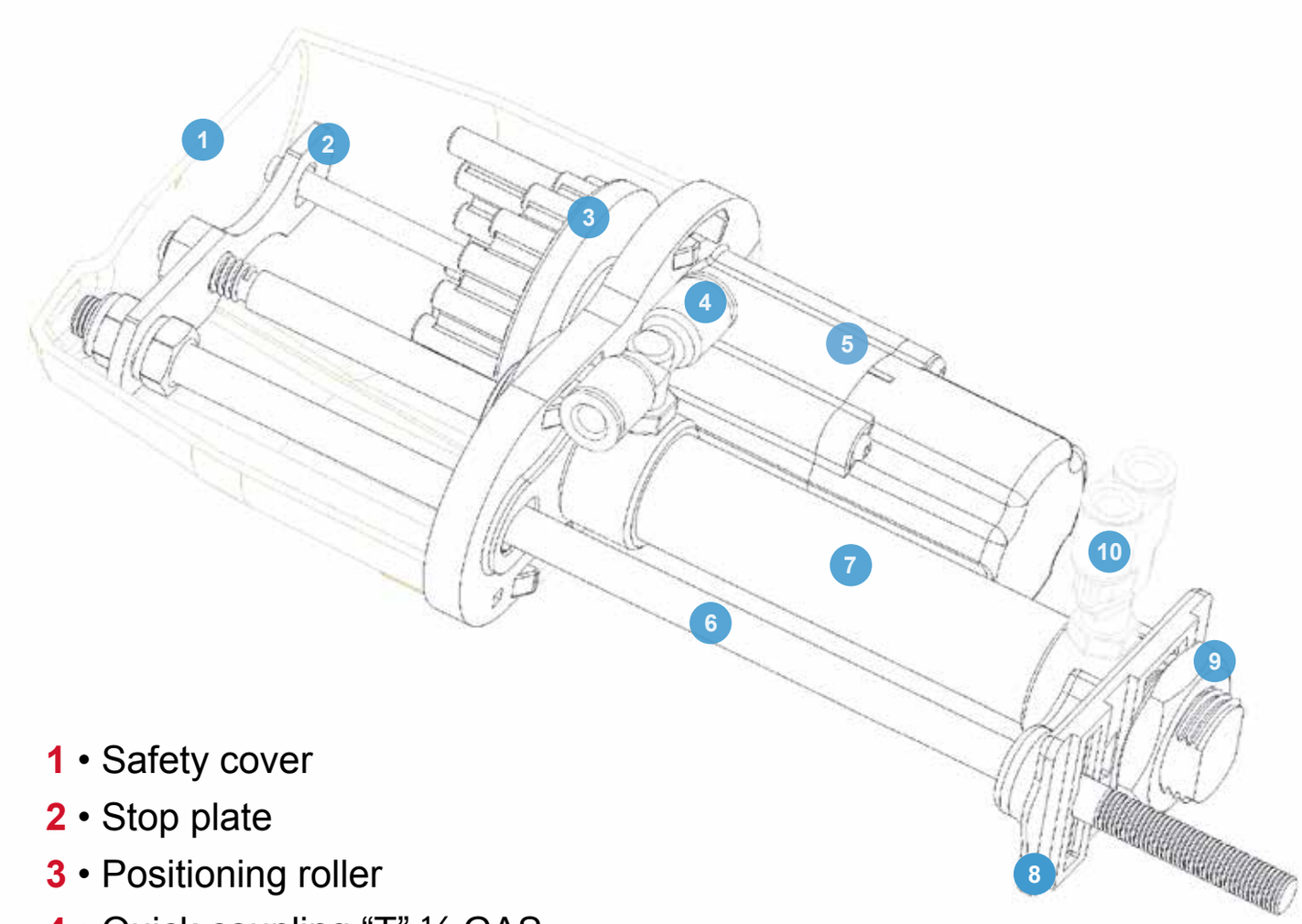

1 • Safety cover
2 • Stop plate
3 • Positioning roller
4 • Quick coupling "T" ⅛ GAS
5 • **SGA™** operating unit
6 • Rod clamp
7 • Mini-cylinder ISO 6432
8 • Mounting support
9 • M22 nut
10 • Quick coupling "Y" ⅛ GAS

38716.Rexnord Catalog Marbett_6 - ENG S118-S161 blauw_v7.indd 157 18-09-18 08:19

Part. S0837

Installation on compressed air conveyors

Each unit can be assembled on bored or slotted supporting profiles, based on the sizes suggested in the figures below.

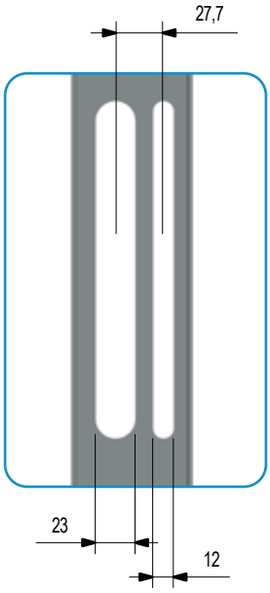

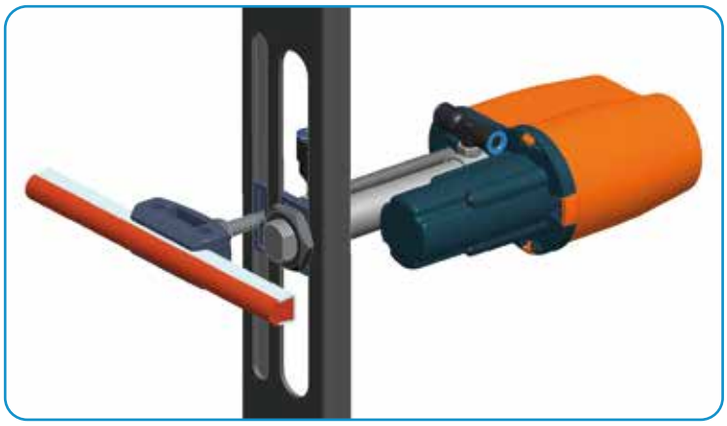

Example of installation of SGA™ system (Side Guide Adjustment™) on a compressed air conveyor.
Working pressure ≥ 4,5 bar during adjustment.

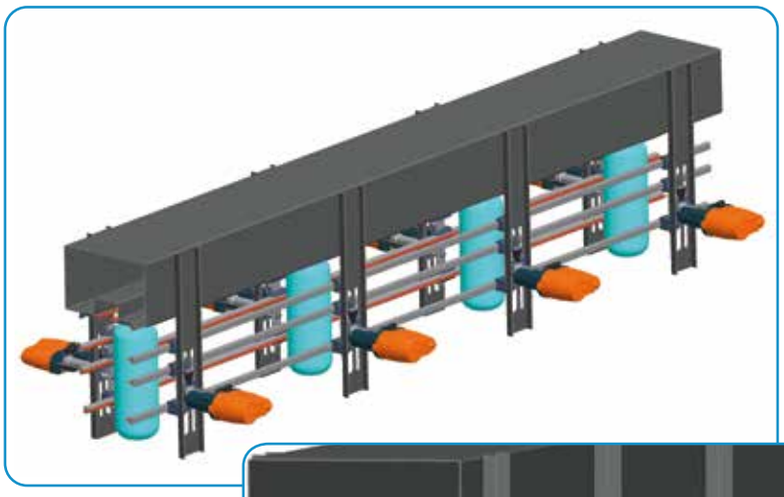

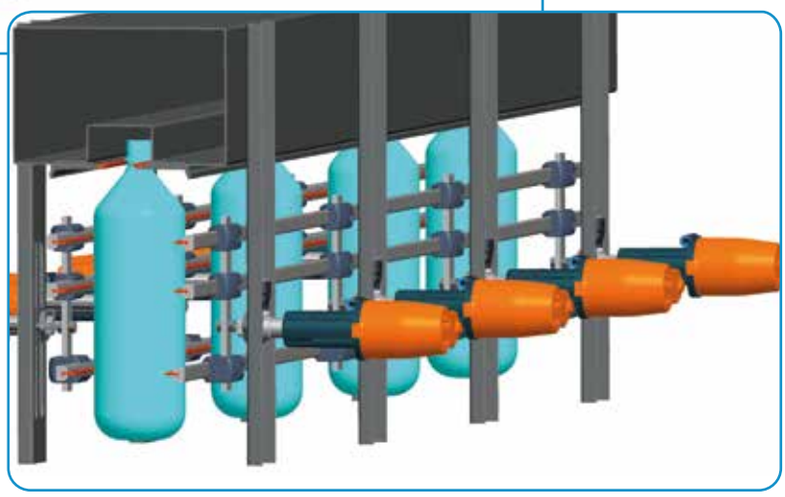

Installation on chain conveyors

Part. S0837

Each unit can be assembled on bored bars with holes according to the sizes indicated in the figures below.

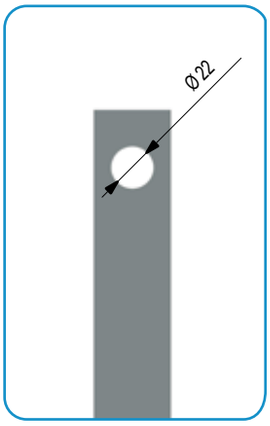

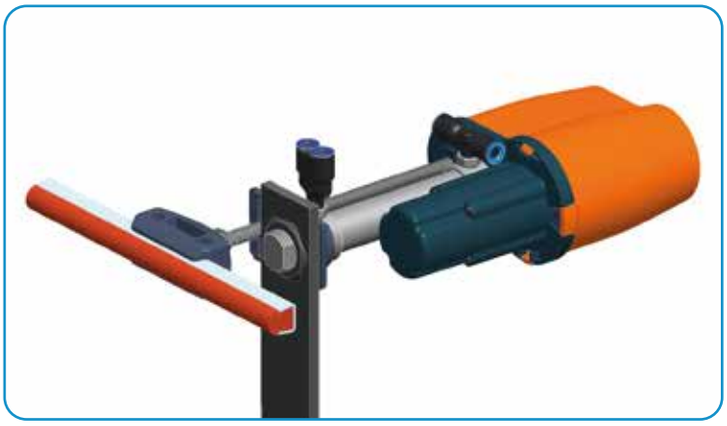

Example of installation of SGA™ system (Side Guide Adjustment™) on an a chain conveyor.
Working pressure ≥ 4,5 bar during adjustment.

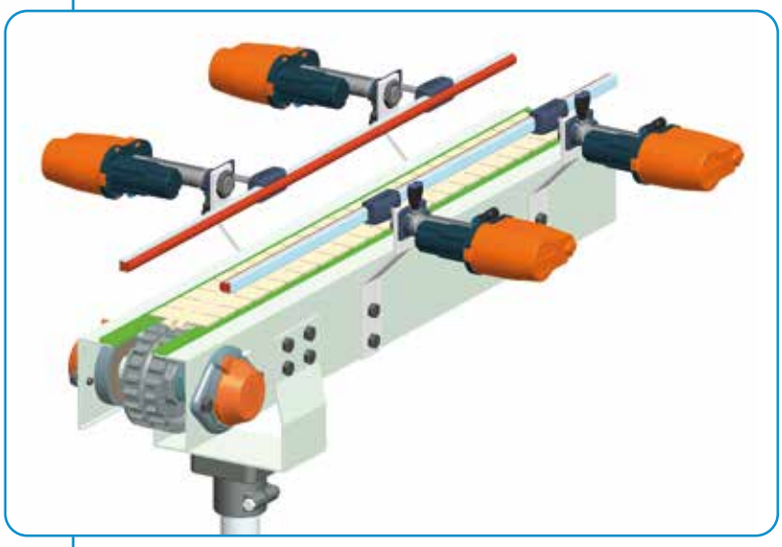

Part. S0837

Technical information

Example of side guide assembly.

Clamp Part. 159 - 437 - 451
Round guides Dia. 8 - 10 - 12 - 14

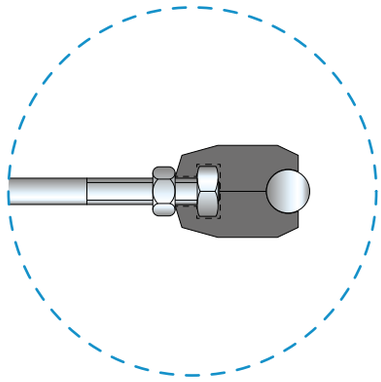

Clamp Part. 215
Guides Part. 223 -
219 - 373 - 393
596 - 308
715 - 765
767 - 768
769 - 770

317

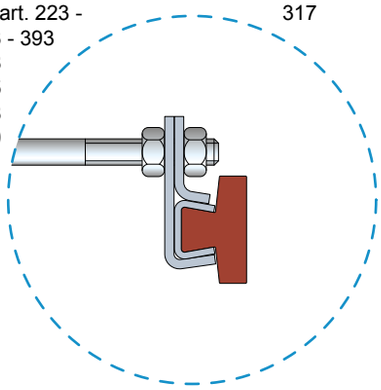

Leave min 20 mm for system movement

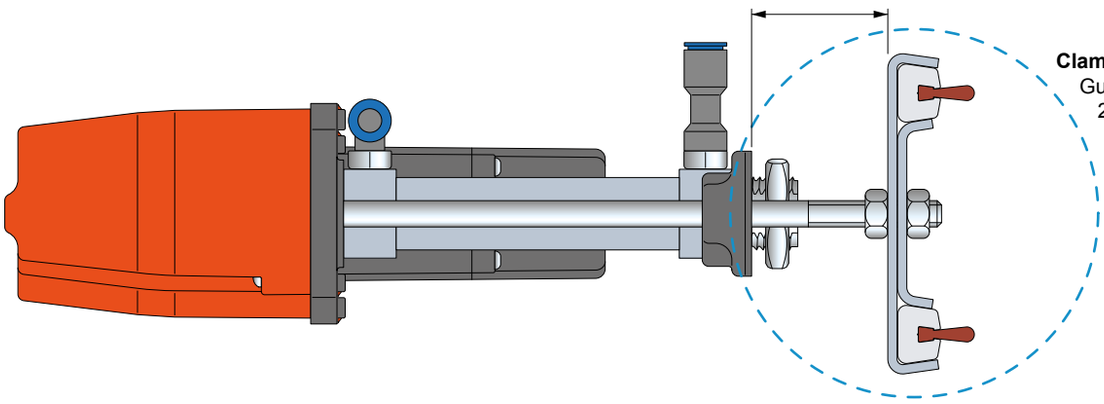

Clamp Part. 217
Guides Part.
223 - 317
219 - 373
393 - 596
308 - 715
765 - 767
768 - 769
770

Clamp Part. 211 - 446
Guides Part. 223 - 317
219 - 373 - 393
596 - 308
715 - 765
767 - 768
769 - 770

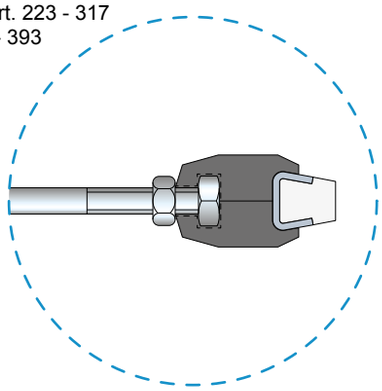

M8 nut UNI 5589-65
Guides Part. 756 - 757 - 856 - 868

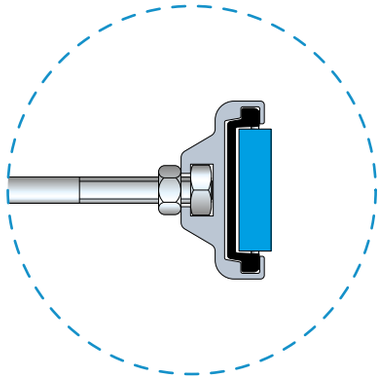

M8 nut UNI 5589-65
Guides Part. 346 - 832

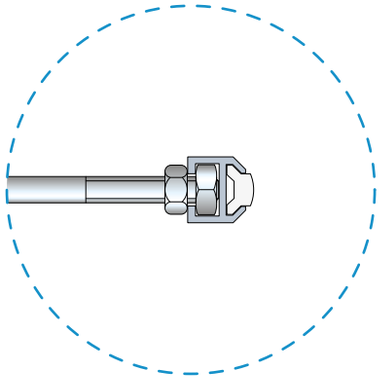

Technical information

Part. **S0837**

Assembly drawing 1

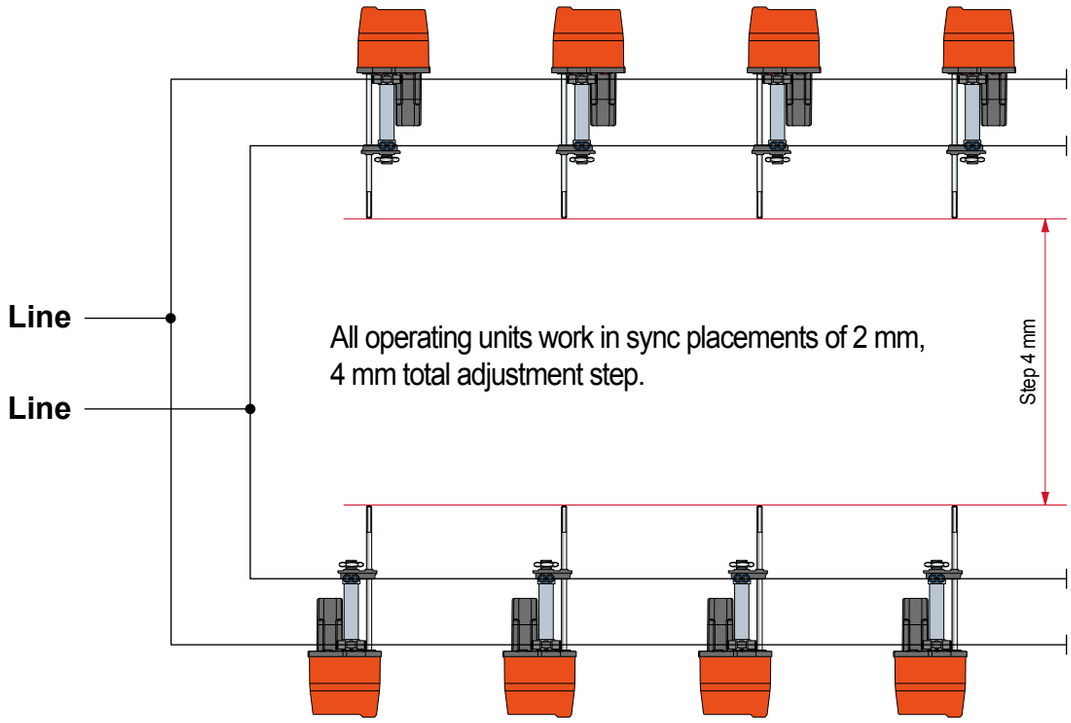

Assembly drawing 2

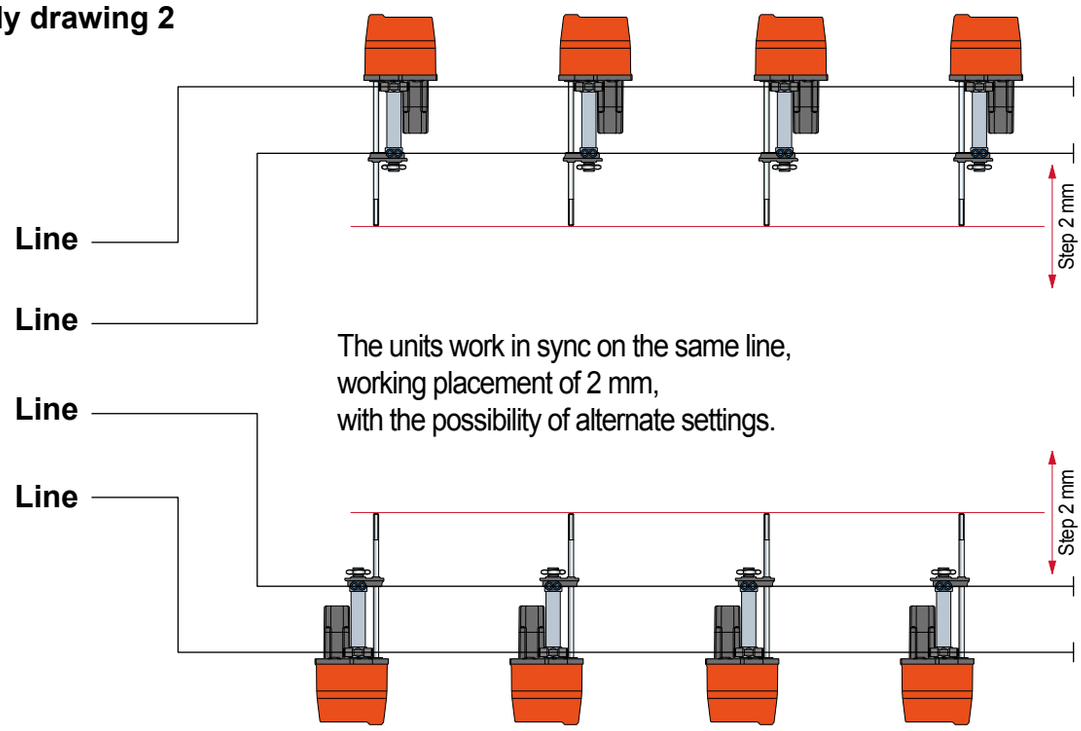

38716.Rexnord Catalog Marbett_6 - ENG S118-S161 blauw_v7.indd 161 18-09-18 08:19

Calculation of thermal expansion

$$Lt = L0 \cdot [\, 1 + a \cdot (T - 20\,°C)\,]$$

Lt = final lenght (mm.)
L0 = initial lenght (mm.)
a = coefficient of linear expansion.
T = operating temperature (°C).
20 °C = ambient temperature.

Example :
aguide having initial length L0 = 1000 mm, coefficient of linear expansion 2X10-4, and an operating temperature of 70 °C, expands by :

$$Lt = 1000\ mm \cdot [\, 1 + 0{,}0002 \cdot (\, 70\,°C - 20\,°C\,)\,] = 1010\ mm$$

Material characteristics

Polyamide PA
• An extremely tough material with excellent dimensional stability even at relatively high temperatures • Good resistance to chemical attack • Inflammability : 94HB.

Reinforced polyamide PA FV
• This material offers improved ductile strength compared with PA polyamide, as well as improved rigidity and dimensional stability • Operating temperatures can also be higher • Inflammability : 94HB.

Polypropylene PP
• Ideal for use at high temperatures • High resistance to chemical attack • Reduced mechanical characteristics • Inflammability : 94HB.

Reinforced polypropylene PP FV
• This material offers better dimensional stability and rigidity than PP polypropylene as well as better mechanical strength • Inflammability : 94HB.

Polyethylene PE (UHMWPE)
• This is the plastic material which is most suited to the manufacture of lateral guides subject to sliding contact, thanks to an extremely low coefficient of friction, excellent wear resistance and zero absorption (important in water lubricated applications) • PE polyethylene also offers high resistance to chemical attack and good sound absorbing qualities • Inflammability : 94HB.

Polyethylene ULF (UHMWPE + solid lubricant)
• Compared to polyethylene PE offers a reduced friction coefficient, with a consequent higher wear resistance • Do not leave traces on the container • Inflammability : 94 HB.

Acetal POM
• Acetalic resins are among the strongest and most resistant thermoplastic materials known • The most important characteristics of these materials are excellent ductile strength, impact resistance, rigidity, and dimensional stability • These materials also resist humidity and attack by most chemical agents • The materials cannot be used in continuous contact with steam or hot water at temperatures above 60° C • Inflammability : 94 HB.

Acetal Rex LF®
• This material conserves the same characteristics of POM acetalic • The addition of a self-lubricating agent, however, gives an extremely low coefficient of friction and excellent wear resistance • Rex LF® acetalic has the same limitations as POM acetalic as far as continuous contact with hot water and steam are concerned • Inflammability : 94HB.

Austenitic stainless steel
• Austenitic stainless steel offering excellent corrosion and oxidation resistance • Ideal for the food industry, dairy and cheese production, beer production, and the pharmaceutical industry • Austenitic stainless steel is cold rolled and responsive to magnets.

Zinc plated steel
• Galvanically zinc coated steel • Galvanization thickness 7 microns.

Nickel plated brass
• Good resistance to chemicals • Humid and wet environments.

Position of chain guide profiles for TableTop® chains

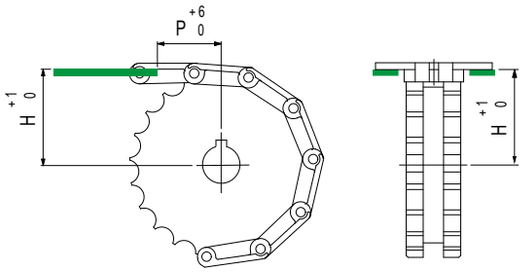

Chain	H mm	P mm
512 - 802 - 805 - 812 - 815 - 820 - 821 - 881 - 881 M - 8811 - 8811 TAB - SLBP 821	(Dp : 2) + 3,2	40
831 - XLBP 831		
880 - 880 TAB - 880 BO	(Dp : 2) + 3,6	40
879 - 879 TAB - 879 BO - LBP 879 BO		
882 - 882 TAB - SLBP 882 TAB - LBP 883	(Dp : 2) + 4,8	40
866 - 963 - 1864 - 1873 - 1874 - 2873 - 3873		
1700K - 1700TABK - AC1700K - 1701 - 1790K - 1701TABK - 1702 - 1716K -	(Dp : 2) - 12	50
1710K - 1710TABK - 1713K - 1713TABK		
Dp = primitive diameter of drive sprocket - mm.		

Position of chain guide profiles for MatTop® chains

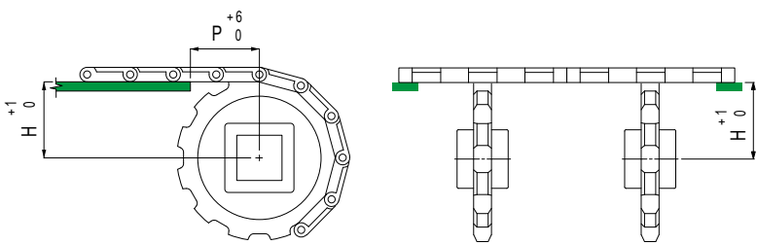

Chain	H mm	P mm
1505 - 1506	(Dp : 2) - 4,95	15
2100	(Dp : 2) - 4,37	25
4705 - 4706 - 4707 - 4705 Vacuum - 4803 - 5705 - 5706	(Dp : 2) - 6,35	38
4812	(Dp : 2) - 5,2	38
4809	(Dp : 2) - 7,9	57
5935 - 5936 - 5935 Vacuum - 8505 - 8506	(Dp : 2) - 4,35	19
5996 - 5997 - 5998	(Dp : 2) - 9,1	57
6390 - 6391 - 6392	(Dp : 2) - 7,0	50
7705 - 7706	(Dp : 2) - 6,35	25
7956	(Dp : 2) - 6,35	32
Dp = primitive diameter of drive sprocket - mm.		

Position of transfer modules Part. S0567 - S0568 - S0569 S0847 - S0848 - S0849

• **Head to tail transfer**

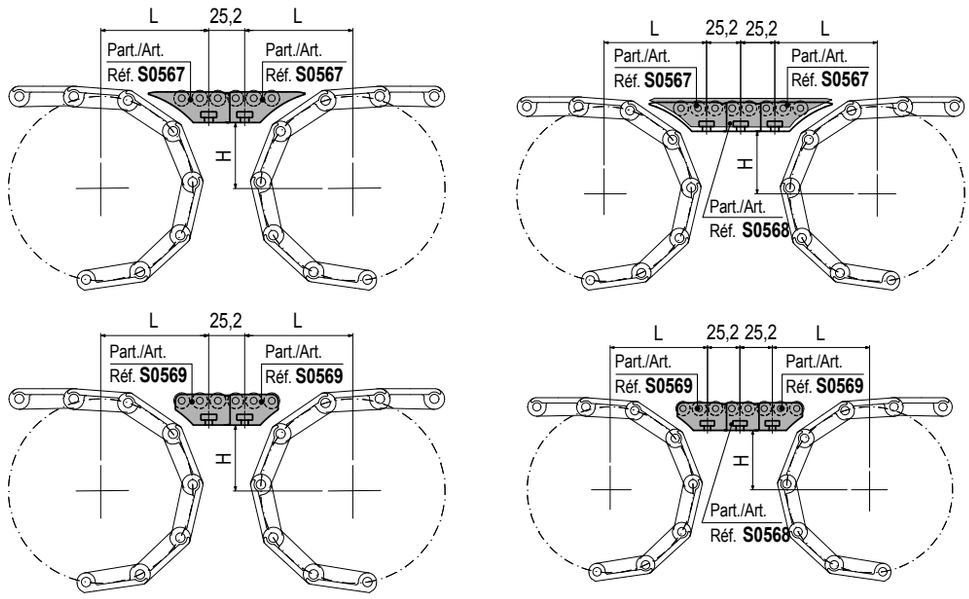

• **90° transfer**

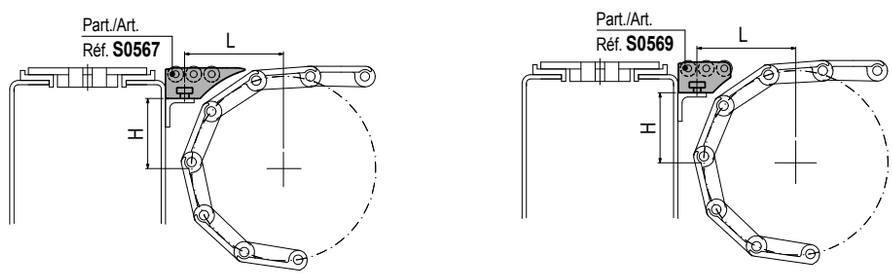

H, L dimensions for TableTop® chains

Chain	Z 15		Z 17		Z 19		Z 21		Z 23		Z 25		Z 27		Z 29	
	H	L	H	L	H	L	H	L	H	L	H	L	H	L	H	L
802 - 805 - 812 - 815 - 881	30,9	64,6	36,8	65,8	42,8	67,0	48,7	68,1	54,7	69,2	60,7	70,2	66,7	73,0	72,7	75,3
881 M - 8811 - 8811 TAB	30,9	64,6	36,8	65,8	42,8	67,0	48,7	68,1	54,7	69,2	60,7	70,2	66,7	73,0	72,7	75,3
512	45,2	67,4	53,2	68,9	61,3	70,3	69,3	74,0	–	–	–	–	–	–	–	–
1864 - 1874 - 4874	37,3	73,2	43,3	74,8	49,4	76,2	55,4	77,6	61,5	75,4	67,5	77,9	–	–	–	–
820	31,5	65,4	37,4	66,7	43,4	67,9	49,3	69,0	55,3	70,1	61,3	71,3	67,3	73,7	73,3	76,0
821	32,3	65,8	38,2	67,1	44,2	68,3	50,1	69,4	56,1	70,6	62,1	71,6	68,1	72,7	74,1	73,7
843	17,1	65,9	21,2	67,1	25,2	68,2	29,2	69,3	33,2	70,3	37,3	71,3	–	–	–	–
845	17,1	63,9	21,2	64,9	25,2	66,0	29,2	67,0	33,2	67,9	37,3	68,8	–	–	–	–
963	37,3	73,5	43,3	75,0	49,4	76,4	55,4	77,8	61,5	75,5	67,5	78,1	–	–	–	–
1873 - 1853 - 853	37,3	68,6	43,3	69,9	49,4	71,2	55,4	72,3	61,5	72,5	67,5	74,9	73,5	77,3	–	–
1843	17,9	63,9	22,0	64,9	26,0	66,0	30,0	66,9	34,0	67,9	38,1	68,8	–	–	–	–
812 Rub. Top - 881 Rub. Top	32,9	65,0	38,8	66,2	44,8	67,3	50,7	68,4	56,7	69,5	62,7	71,4	68,7	73,8	74,7	76,1
802 Rub. Top	33,9	65,2	39,8	66,4	45,8	67,5	51,7	68,6	57,7	69,7	63,7	71,8	69,7	74,2	75,7	76,5
HFP 820	33,5	65,1	39,4	66,3	45,4	67,5	51,3	68,6	57,3	69,6	63,3	71,6	69,3	74,0	75,3	76,3
HFP 821	34,3	65,3	40,2	66,5	46,2	67,6	52,1	68,7	58,1	69,7	64,1	72,0	70,1	74,3	76,1	76,6
HFP 867 - HFP 1877 - HFP 1873	40,3	66,5	46,3	67,6	52,4	68,7	58,4	69,8	64,5	72,1	70,5	74,5	76,5	76,8	–	–
SLBP 821	47,3	67,8	53,2	68,9	59,2	69,9	65,1	72,4	71,1	74,7	77,1	77,0	–	–	–	–

Chain	Z 9		Z 10		Z 11		Z 12		Z 13		Z 14		Z 15	
	H	L	H	L	H	L	H	L	H	L	H	L	H	L
880 TAB, 879 TAB	40,8	66,6	46,7	67,7	52,7	68,8	58,7	69,9	64,7	72,2	70,7	74,6	76,7	76,8
882 TAB	42,7	66,9	48,6	68,1	54,6	69,1	60,6	70,2	–	–	–	–	–	–
LPC 279	50,2	68,3	56,1	69,4	62,1	71,2	68,1	73,5	74,1	75,8	–	–	–	–
HFP 880 TAB	42,8	67,0	48,7	68,1	54,7	69,2	60,7	70,2	66,7	73,0	72,7	75,3	–	–
HFP 882 TAB	45,2	67,4	51,1	68,5	57,1	69,6	63,1	71,6	–	–	–	–	–	–
SLBP 882 TAB	57,2	69,6	63,1	71,6	69,1	73,9	75,1	76,2	–	–	–	–	–	–

H, L dimensions for MatTop® chains

Chain	Z 12		Z 16		Z 21		Z 23		Z 24		Z 25		Z 27		Z 32	
	H	L	H	L	H	L	H	L	H	L	H	L	H	L	H	L
1505 - 1506	11,5	60,0	20,9	62,3	–	–	–	–	40,0	66,4	–	–	–	–	59,0	69,9
4705 - 4706 - 5705 - 5706	57,5	69,6	–	–	48,5	68,0	54,5	69,1	57,5	69,6	60,5	70,2	66,5	72,9	–	–
HFP 5705	–	–	–	–	51,0	68,5	57,0	69,9	60,0	70,1	63,0	71,5	69,0	73,9	–	–

Chain	Z 7		Z 8		Z 9		Z 10		Z 11		Z 12		Z 19		Z 19	
	H	L	H	L	H	L	H	L	H	L	H	L	H	L	H	L
2100	–	–	–	–	–	–	–	–	27,0	63,7	–	–	9,2	59,3	59,1	69,9
4812	–	–	32,5	64,9	–	–	–	–	–	–	56,3	69,4	–	–	–	–
5996	52,5	68,8	–	–	70,1	74,3	–	–	–	–	–	–	–	–	–	–
6390 - 6391 - 6392	–	–	49,8	68,3	–	–	65,4	72,5	–	–	–	–	–	–	–	

Chain	Z 10		Z 16		Z 18		Z 21		Z 24		Z 25		Z 31			
	H	L	H	L	H	L	H	L	H	L	H	L	H	L		
5935 - 5936 - 8505 - 8506	13,0	60,4	–	–	–	–	–	–	55,6	69,3	58,6	69,8	76,9	76,9		
7705 - 7706	–	–	49,0	68,1	57,0	69,6	69,1	73,9	–	–	–	–	–	–		

H, L dimensions for MCC chains

Chain	Z 28		
	H	L	
500	38,6	66,1	
505	40,6	66,5	

Chain	Z 10		Z 12		Z 13		Z 15		Z 16		Z 18		Z 20		Z 21	
	H	L	H	L	H	L	H	L	H	L	H	L	H	L	H	L
1000	–	–	31,0	64,6	–	–	–	–	47,0	67,8	55,0	69,2	63,1	70,6	–	–
1005	–	–	–	–	–	–	–	–	–	–	57,0	69,6	–	–	69,1	73,9
1050	–	–	–	–	–	–	–	–	54,8	69,2	62,8	71,5	–	–	–	–
1055	–	–	–	–	–	–	–	–	58,8	69,9	66,8	73,1	–	–	–	–
1255	35,3	65,5	–	–	50,2	68,4	60,3	70,1	65,3	72,4	–	–	–	–	–	–

Position of transfer modules Part. S0672 - S0568 - S0846

• **Head to tail transfer**

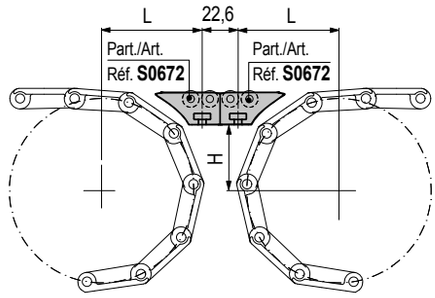

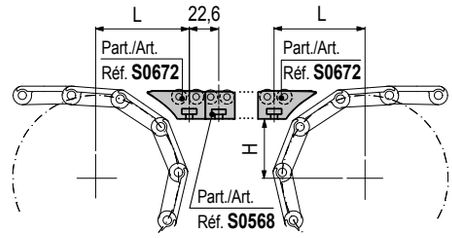

• **90° transfer**

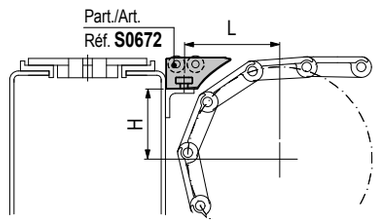

H, L dimensions for TableTop® chains

Chain	Z 15		Z 17		Z 19		Z 21		Z 23		Z 25		Z 27		Z 29	
	H	L	H	L	H	L	H	L	H	L	H	L	H	L	H	L
802 - 805 - 812 - 815 - 881	30,9	56,8	36,8	58,2	42,8	60,9	48,7	63,7	54,7	66,3	60,7	68,8	66,7	71,2	72,7	73,5
881 M - 8811 - 8811 TAB	30,9	56,8	36,8	58,2	42,8	60,9	48,7	63,7	54,7	66,3	60,7	68,8	66,7	71,2	72,7	73,5
512	45,2	62,0	53,2	65,6	61,3	69,0	69,3	72,2	–	–	–	–	–	–	–	–
1864 - 1874 - 4874	37,3	65,0	43,3	65,3	49,4	68,2	55,4	70,9	61,5	73,6	67,5	76,1	–	–	–	–
820	31,5	57,6	37,4	59,0	43,4	61,6	49,3	64,3	55,3	67,0	61,3	69,5	67,3	71,9	73,3	74,2
821	32,3	58,0	38,2	59,4	44,2	62,1	50,1	64,8	56,1	67,4	62,1	69,9	68,1	72,3	74,1	74,7
843	17,1	57,3	21,2	58,6	25,2	59,8	29,2	61,0	33,2	62,1	37,3	63,2	–	–	–	–
845	17,1	55,4	21,2	56,6	25,2	57,8	29,2	58,9	33,2	59,9	37,3	60,9	–	–	–	–
963	37,3	65,2	43,3	65,4	49,4	68,3	55,4	71,1	61,5	73,7	67,5	76,3	–	–	–	–
1873 - 1853 - 853	37,3	60,7	43,3	62,6	49,4	65,4	55,4	68,1	61,5	70,7	67,5	73,1	73,5	75,5	–	–
1843	17,9	55,5	22,0	56,7	26,0	57,8	30,0	58,9	34,0	59,9	38,1	60,9	–	–	–	–
812 Rub. Top - 881 Rub. Top	32,9	57,3	38,8	58,6	44,8	61,9	50,7	64,6	56,7	67,1	62,7	69,6	68,7	72,0	74,7	74,3
802 Rub. Top	33,9	57,5	39,8	58,8	45,8	62,3	51,7	65,0	57,7	67,5	63,7	70,0	69,7	72,4	75,7	74,7
HFP 820	33,5	57,4	39,4	58,8	45,4	62,1	51,3	64,8	57,3	67,4	63,3	69,8	69,3	72,2	75,3	74,5
HFP 821	34,3	57,6	40,2	58,9	46,2	62,5	52,1	65,2	58,1	67,7	64,1	70,2	70,1	72,5	76,1	74,8
HFP 867 - HFP 1877 - HFP 1873	40,3	59,0	46,3	62,6	52,4	65,3	58,4	67,8	64,5	70,3	70,5	72,7	76,5	75,0	–	–
SLBP 821	47,3	63,0	53,2	65,6	59,2	68,2	65,1	70,6	71,1	72,9	77,1	75,2	–	–	–	–

Chain	Z 9		Z 10		Z 11		Z 12		Z 13		Z 14		Z 15	
	H	L	H	L	H	L	H	L	H	L	H	L	H	L
880 TAB, 879 TAB	40,8	59,1	46,7	62,8	52,7	65,4	58,7	68,0	64,7	70,4	70,7	72,8	76,7	75,0
882 TAB	42,7	60,9	48,6	63,6	54,6	66,2	60,6	68,7	–	–	–	–	–	–
LPC 279	50,2	64,3	56,1	66,9	62,1	69,4	68,1	71,7	74,1	74,0	–	–	–	–
HFP 880 TAB	42,8	60,9	48,7	63,7	54,7	66,3	60,7	68,8	66,7	71,2	72,7	73,5	–	–
HFP 882 TAB	45,2	62,1	51,1	64,7	57,1	67,3	63,1	69,8	–	–	–	–	–	–
SLBP 882 TAB	57,2	67,3	63,1	69,8	69,1	72,1	75,1	74,4	–	–	–	–	–	–

H, L dimensions for MatTop® chains

Chain	Z 12		Z 16		Z 21		Z 23		Z 24		Z 25		Z 27		Z 32	
	H	L	H	L	H	L	H	L	H	L	H	L	H	L	H	L
1505 - 1506	11,5	51,5	20,9	54,2	–	–	–	–	40,0	58,9	–	–	–	–	59,0	68,1
4705 - 4706 - 5705 - 5706	57,5	67,5	–	–	48,5	63,6	54,5	66,2	57,5	67,5	60,5	68,7	66,5	71,1	–	–
HFP 5705	–	–	–	–	51,0	64,7	57,0	67,3	60,0	68,5	63,0	69,7	69,0	72,1	–	–

Chain	Z 7		Z 8		Z 9		Z 10		Z 11		Z 12		Z 19		Z 19	
	H	L	H	L	H	L	H	L	H	L	H	L	H	L	H	L
2100	–	–	–	–	–	–	–	–	27,0	55,8	–	–	9,2	50,8	59,1	68,1
4812	–	–	32,5	57,2	–	–	–	–	–	–	56,3	67,0	–	–	–	–
5996	52,5	65,3	–	–	70,1	72,5	–	–	–	–	–	–	–	–	–	–
6390 - 6391 - 6392	–	–	49,8	64,2	–	–	65,4	70,7	–	–	–	–	–	–	–	–

Chain	Z 10		Z 16		Z 18		Z 21		Z 24		Z 25		Z 31			
	H	L	H	L	H	L	H	L	H	L	H	L	H	L		
5935 - 5936 - 8505 - 8506	13,0	52,00	–	–	–	–	–	–	55,6	66,6	58,6	67,9	76,9	75,1		
7705 - 7706	–	–	49,0	63,8	57,0	67,3	69,1	72,1	–	–	–	–	–	–		

H, L dimensions for MCC chains

Chain	Z 28		
	H	L	
500	38,6	58,6	
505	40,6	59,0	

Chain	Z 10		Z 12		Z 13		Z 15		Z 16		Z 18		Z 20		Z 21	
	H	L	H	L	H	L	H	L	H	L	H	L	H	L	H	L
1000	–	–	31,0	56,8	–	–	–	–	47,0	62,9	55,0	66,4	63,1	69,8	–	–
1005	–	–	–	–	–	–	–	–	–	–	57,0	67,3	–	–	69,1	72,1
1050	–	–	–	–	–	–	–	–	54,8	66,3	62,8	69,7	–	–	–	–
1055	–	–	–	–	–	–	–	–	58,8	68,0	66,8	71,3	–	–	–	–
1255	35,3	57,8	–	–	50,2	64,3	60,3	68,6	65,3	70,6	–	–	–	–	–	–

ARTICULATED FEET
in reinforced polyamide

Pag. R08 - R20

ARTICULATED FEET GRIPPER
in reinforced polypropylene and stainless steel

Pag. R22 - R33

ARTICULATED FEET
in steel

Pag. R34 - R39

FIXED FEET
in steel

Pag. R39

THREADED BUSHINGS
for round and square tubes

Pag. R40 - R41

38716.Rexnord Catalog Marbett_8 - ENG R00-R41 Groen_v5.indd 1 18-09-18 08:26

ARTICULATED FEET in reinforced polyamide

Part. R0173 - Pag. R08-R09
Ø 50 • Max. load 10000 N.

Part. R0098 - Pag. R10-R11
Ø 60 • Max. load 12000 N.

Part. R0323 - Pag. R12-R13
Ø 80 • Prefitting for fixing
• Max. load 10000 N.

Part. R0133 - Pag. R14-R15
Ø 100 • Prefitting for fixing
• Max. load 13000 N.

Part. R0479 - Pag. R16-R17
Ø 110 • Prefitting for fixing
• Max. load 20000 N.

Part. R0869 - Pag. R18
Ø 124 • Prefitting for fixing
• Max. load 45000 N.

Part. R0169 - Pag. R19
Ø 124 • Prefitting for fixing
• Max. load 45000 N.

Part. R0134 - Pag. R20
Ø 100 • Prefitting for fixing
• Max. load 20000 N.

Part. R0297 - Pag. R21
Ø 124 • Prefitting for fixing
• Max. load 45000 N.

Part. R0726 - Pag. R18-R19-R21
Ø 170 • Spacer for
Réf. R0869 - R0169 - R0297.

ARTICULATED FEET GRIPPER in reinforced polypropylene

Part. R0626 - Pag. R22-R23
Ø 80 • Hygiene
• Customized with logo
• Max. load 12000 N.

Part. R0622 - Pag. R26-R27
Ø 100 • Hygiene
• Customized with logo
• Max. load 19500 N.

Part. R0628 - Pag. R30-R31
Ø 120 • Hygiene
• Customized with logo
• Max. load 22000 N.

ARTICULATED FEET GRIPPER in stainless steel

Part. R0627 - Pag. R24-R25
Ø 80 • Hygiene
• Customized with logo
• Max. load 12000 N.

Part. R0623 - Pag. R28-R29
Ø 100 • Hygiene
• Customized with logo
• Max. load 19500 N.

Part. R0629 - Pag. R32-R33
Ø 120 • Hygiene
• Customized with logo
• Max. load 22000 N.

REXNORD

ARTICULATED FEET in steel

Part. R0349 - Pag. R34
Ø 123 • N. 4 holes • Stainless steel and zinc plated steel • Max. load 10000 N.

Part. R0408 - Pag. R35
Ø 160 • Painted steel • Max. load 50000 N.

Part. R0747 - Pag. R36
Ø 80 • Stainless steel • Hygiene • Max. load 25000 N.

Part. R0748 - Pag. R37
Ø 100 • Stainless steel • Hygiene • Max. load 25000 N.

Part. R0749 - Pag. R38
Ø 120 • Stainless steel • Hygiene • Max. load 25000 N.

Part. R0747F - Pag. R037
Ø 80 • Stainless steel • Hygiene • Prefitting for fixing • Max. load 25000 N.

Part. R0748F - Pag. R37
Ø 100 • Stainless steel • Hygiene • Prefitting for fixing • Max. load 25000 N.

Part. R0750S - Pag. R38
Ø 80 • Stainless steel • Hygiene • Max. load 25000 N.

Part. R0750SF - Pag. R38
Ø 80 • Stainless steel • Hygiene • Prefitting for fixing • Max. load 25000 N.

38716.Rexnord Catalog Marbett_8 - ENG R00-R41 Groen_v5.indd 3 18-09-18 08:26

FIXED FEET in steel

Part. R0406 - Pag. R39
Ø 123 • Painted steel
• Max. load 50000 N.

REXNORD

THREADED BUSHINGS for round and square tubes

Part. R0180 - Page R40
For round tubes
Ø 48,3-54-60.3 mm and 2”

Part. R0224 - Page R41
For square tubes 40-50 mm
and 2”

38716.Rexnord Catalog Marbett_8 - ENG R00-R41 Groen_v5.indd 5 18-09-18 08:27

SPINDLE MATERIALS

Stainless steel
• High resistance to chemicals.
• Excellent resistance to oxidation.
• Operating temperature :
in air (- 70°C to + 430°C)
in hot water (+ 120°C)
• Sectors of use
Humid and corrosive environments. Environments where hygiene regulations are strict and indispensable (food and dairy industry, chemicals-pharmaceuticals, bottling). Electronics industry (where non-magnetic properties are required).

Zinc plated steel
• Operating temperature :
in air (- 40°C to + 180°C)
in hot water (+ 120°C)
• Sectors of use
Moisture-free environments with low corrosion.

Nickel plated brass
• Good resistance to chemicals.
• Operating temperature :
in air (- 40°C to + 180°C)
in hot water (+ 120°C)
• Sectors of use
Humid and wet environments.

Reinforced polyamide with steel pin
• Good resistance to chemicals.
• Operating temperature :
in air (- 5°C to + 120°C)
in hot water (+ 100°C)
• Colour: black.
• Sectors of useIndustrial, packaging.

FOOTPLATE MATERIALS

Reinforced polyamide PA FV
• Good mechanical strength.
Able to withstand high load capacities.
• High thermal resistance.
• Good resistance to chemicals.
• Operating temperature:
in air (- 30°C to + 120°C)
in hot water (+ 100°C)
• Colour : black.
• Inflammability : 94HB.

Reinforced polypropylene PP FV
• Recommended in applications requiring high resistance to chemicals and fair mechanical properties (the load capacity is lower than reinforced polyamide).
• Operating temperature :
in air (+ 5°C to + 115°C)
in hot water (+ 115°C)
• Colour : black.
• Inflammability : 94HB.

ANTI-SLIP MATERIALS

NBR rubber
• Operating temperature :
in air (- 35°C to + 100°C)
in hot water (+ 80°C)
• Colour : black.
• Inflammability : 94HB

Notes

www.rexnord.com

Please contact our Application Engineers at +31 174 445 111 for assistance with product selection.

38716.Rexnord Catalog Marbett_8 - ENG R00-R41 Groen_v5.indd 7 18-09-18 08:27

Articulated Feet

in reinforced polyamide

Part. R0173

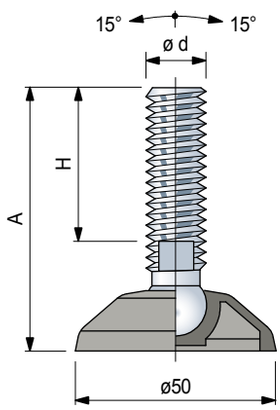

	ø d	A (mm)	H (mm)	Spindle type 1	Spindle type 1a	Spindle type 2a	mm	Code feet supplied without anti-slip	Fmax. N
Spindle in stainless steel									
M16	105	81	-	1a	-	13		**626663**	10000
	155	124	-	1a	-	13		**626673**	
Spindle in zinc plated steel									
M10	95	71	-	-	2a	12		**625332**	10000
M12	90	69	-	-	2a	12		**625362**	
	120	96	-	-	2a	12		**625372**	

Item code for order = Part. + Code
- Footplate material: reinforced polyamide PA FV (black).
- Note: for spindles type 1 ball in reinforced polyamide.
- Packaging: 12 pieces.
- Anti-slip supplied separately.
- On request different length.
- Fmax. = maximum applicable load in static conditions.

Accessories

Anti-slip

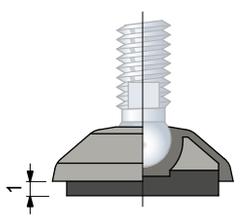

- Code: **R0000630012**.
- Material: NBR rubber (black), 70 Shore.
- Assembly: press-fit.
- Packaging: 12 pieces

Nut + Washer

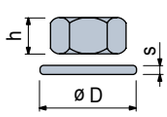

	Code Stainless steel AISI 304	Code Zinc plated steel	h mm	mm	øD mm	s mm
M8	-	**R0000630102**	6,5	13	17	1,6
M10	**R0000630182**	**R0000630112**	8	17	21	2
M12	**R0000630192**	**R0000630122**	10	19	24	2,5
M14	**R0000630202**	**R0000630132**	11	22	28	2,5
M16	**R0000630212**	**R0000630142**	13	24	30	3

Packaging: 8 pieces (for M8).
12 pieces (for M12, M14, M16).

Articulated Feet

in reinforced polyamide

Ø50

REXNORD

Part. R0173

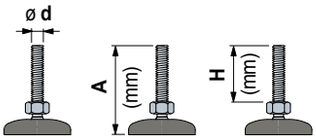

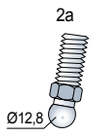

Spindle in stainless steel			Spindle type	mm	Code	Fmax. N
M10	95	71	2a	12	**625252**	10000
M12	90	69	2a	12	**625262**	
	155	132	2a	12	**625272**	

feet supplied without anti-slip

Item code for order = Part. + Code
- Footplate material: reinforced polyamide PA FV (black).
- Packaging: 12 pieces.
- Anti-slip supplied separately.
- On request different length.
- Fmax. = maximum applicable load in static conditions.

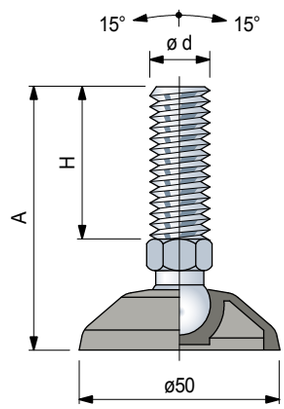

Accessories

Anti-slip

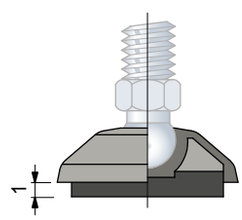

- Code: **R0000630012**.
- Material: NBR rubber (black), 70 Shore.
- Assembly: press-fit.
- Packaging: 12 pieces

Nut + Washer

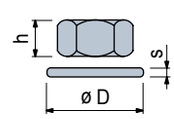

	Code: Stainless steel AISI 304	Code: Zinc plated steel	h mm	mm	øD mm	s mm
M8	-	**R0000630102**	6,5	13	17	1,6
M10	**R0000630182**	**R0000630112**	8	17	21	2
M12	**R0000630192**	**R0000630122**	10	19	24	2,5
M14	**R0000630202**	**R0000630132**	11	22	28	2,5
M16	**R0000630212**	**R0000630142**	13	24	30	3

Packaging: 8 pieces (for M8).
12 pieces (for M12, M14, M16).

38716.Rexnord Catalog Marbett_8 - ENG R00-R41 Groen_v5.indd 9 18-09-18 08:27

Articulated Feet

in reinforced polyamide

Part. R0098

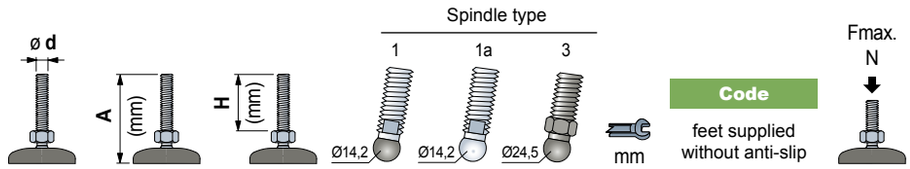

Spindle in stainless steel								
M16	100	64	-	1a	-	13	**626012**	10000
	115	81	-	1a	-	13	**626022**	
	160	124	-	1a	-	13	**626032**	
	185	151	-	1a	-	13	**626042**	
M20	120	84	-	1a	-	16	**626052**	
	185	149	-	1a	-	16	**626062**	
	245	208	-	1a	-	16	**621293**	
M24	250	209	-	1a	-	19	**621303**	

Spindle in zinc plated steel								
M16	95	61	-	1a	-	13	**626102**	10000
	150	116	-	1a	-	13	**626122**	
	185	151	-	1a	-	13	**626132**	
M20	185	150	-	1a	-	16	**626152**	
M24	240	150	-	1a	-	16	**10344000**	

Spindle in reinforced polyamid (black) with steel pin								
M16	100	54	-	-	3	24	**61920**	6000
M24	240	205	-	1a	-	19	**10344000**	

Item code for order = Part. + Code
- Footplate material: reinforced polyamide PA FV (black).
- Note: for spindles type 1 ball in reinforced polyamide.
- Packaging: 24 pieces.
- Anti-slip supplied separately.
- On request different length.
- Fmax. = maximum applicable load in static conditions.

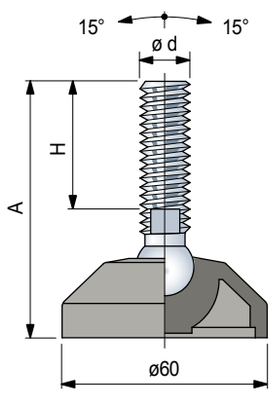

Accessories

Anti-slip

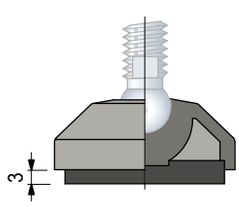

- Code: **R0000630022**.
- Material: NBR rubber (black), 70 Shore.
- Assembly: press-fit.
- Packaging: 12 pieces

Nut + Washer

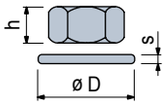

	Code					
	Stainless steel AISI 304	Zinc plated steel	h mm	mm	øD mm	s mm
M12	**R0000630192**	**R0000630122**	10	19	24	2,5
M14	**R0000630202**	**R0000630132**	11	22	28	2,5
M16	**R0000630212**	**R0000630142**	13	24	30	3
M20	**R0000630222**	**R0000630152**	16	30	37	3
M24	**R0000630232**	**R0000630162**	19	36	44	4

Packaging: 12 pieces

Articulated Feet

in reinforced polyamide

Ø60

REXNORD

Part. R0098
Reinforced version

ø d	A (mm)	H (mm)	Spindle type 6	Spindle type 6b	mm	Code	Fmax. N
			Ø24,5	Ø24,5		feet supplied without anti-slip	
Spindle in stainless steel							
M16	150	109	-	6b	24	**628792**	12000
	200	159	-	6b	24	**628812**	
M24	220	179	-	6b	24	**628872**	
Spindle in zinc plated steel							
M16	195	154	-	6b	24	**628852**	12000

Item code for order = Part. + Code
- Footplate material: reinforced polyamide PA FV (black).
- Note: for spindles type 6 ball in reinforced polyamide.
- Packaging: 12 pieces.
- Anti-slip supplied separately.
- On request different length.
- Fmax. = maximum applicable load in static conditions.

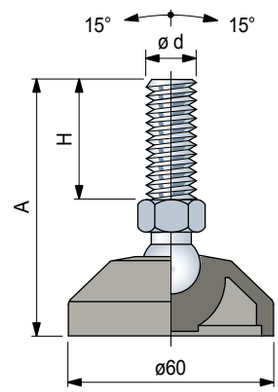

Accessories

Anti-slip

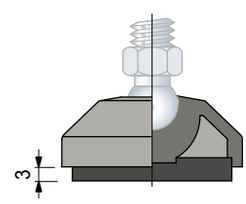

- Code: **R0000630022**.
- Material: NBR rubber (black), 70 Shore.
- Assembly: press-fit.
- Packaging: 12 pieces

Nut + Washer

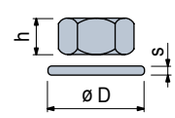

	Code: Stainless steel AISI 304	Code: Zinc plated steel	h mm	mm	øD mm	s mm
M12	**R0000630192**	**R0000630122**	10	19	24	2,5
M14	**R0000630202**	**R0000630132**	11	22	28	2,5
M16	**R0000630212**	**R0000630142**	13	24	30	3
M20	**R0000630222**	**R0000630152**	16	30	37	3
M24	**R0000630232**	**R0000630162**	19	36	44	4

Packaging: 8 pieces

38716.Rexnord Catalog Marbett_8 - ENG R00-R41 Groen_v5.indd 11 18-09-18 08:27

Articulated Feet

in reinforced polyamide

Part. R0323

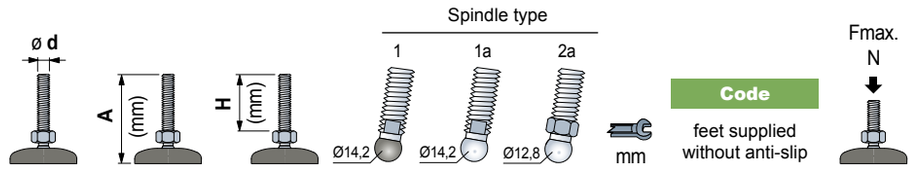

Spindle in stainless steel								
M16	95	64	-	1a	-	13	**626582**	10000
	110	81	-	1a	-	13	**626592**	
	155	124	-	1a	-	13	**626602**	
	180	151	-	1a	-	13	**626612**	
M20	115	84	-	1a	-	16	**626622**	
	180	149	-	1a	-	16	**626632**	

Spindle in zinc plated steel								
M10	95	71	-	-	2a	12	**60464N**	9000
M12	95	69	-	-	2a	12	**62313N**	
	120	96	-	-	2a	12	**678941N**	
M16	145	116	-	1a	-	13	**626692**	10000
	180	151	-	1a	-	13	**626702**	
M20	180	150	-	1a	-	16	**626722**	

Item code for order = Part. + Code
- Footplate material: reinforced polyamide PA FV (black).
- Note: for spindles type 1 ball in reinforced polyamide.
- Packaging: 12 pieces.
- Anti-slip supplied separately.
- On request different length.
- Fmax. = maximum applicable load in static conditions.

Fixing holes, obtainable by breaking "diaphragm".

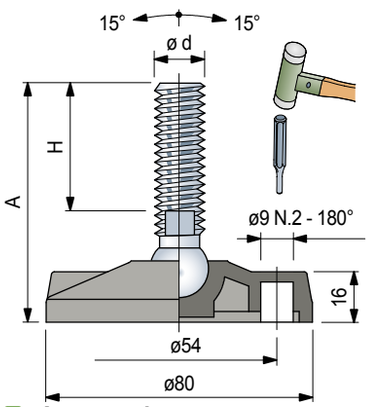

Accessories

Anti-slip

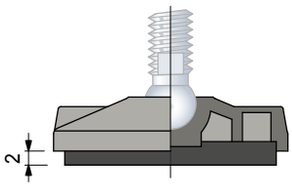

- Code: **R0000630042**.
- Material: NBR rubber (black), 70 Shore.
- Assembly: press-fit.
- Packaging: 12 pieces

Nut + Washer

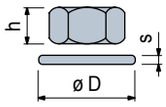

	Code					
	Stainless steel AISI 304	Zinc plated steel	h mm	mm	øD mm	s mm
M8	-	**R0000630102**	6,5	13	17	1,6
M10	**R0000630182**	**R0000630112**	8	17	21	2
M12	**R0000630192**	**R0000630122**	10	19	24	2,5
M14	**R0000630202**	**R0000630132**	11	22	28	2,5
M16	**R0000630212**	**R0000630142**	13	24	30	3
M20	**R0000630222**	**R0000630152**	16	30	37	3
M24	**R0000630232**	**R0000630162**	19	36	44	4

Packaging: 12 pieces (for M8, M10).
8 pieces (for M12, M14, M16, M20, M24).

Articulated Feet

in reinforced polyamide

Ø80

REXNORD

Part. R0323

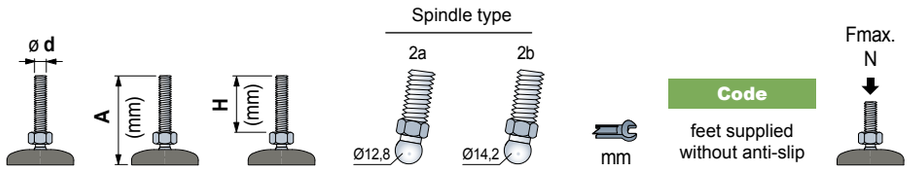

Spindle in stainless steel							
M10	95	71	2a	-	12	**65686N**	9000
M12	95	69	2a	-	12	**65596N**	
	155	132	2a	-	12	**679061N**	

Item code for order = Part. + Code
- Footplate material : reinforced polyamide PA FV (black).
- Packaging : 12 pieces.
- Anti-slip supplied separately.
- On request different length.
- Fmax. = maximum applicable load in static conditions.

Fixing holes, obtainable by breaking "diaphragm".

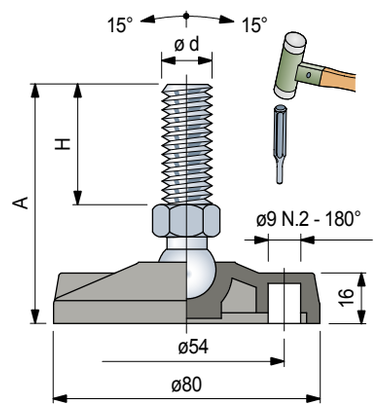

Accessories

Anti-slip

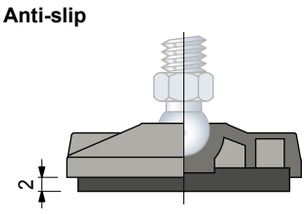

- Code: **R0000630042**.
- Material: NBR rubber (black), 70 Shore.
- Assembly: press-fit.
- Packaging: 24 pieces

Nut + Washer

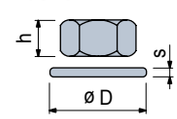

	Code					
	Stainless steel AISI 304	Zinc plated steel	h mm	mm	øD mm	s mm
M10	**R0000630182**	**R0000630112**	8	17	21	2
M12	**R0000630192**	**R0000630122**	10	19	24	2,5
M14	**R0000630202**	**R0000630132**	11	22	28	2,5
M16	**R0000630212**	**R0000630142**	13	24	30	3
M20	**R0000630222**	**R0000630152**	16	30	37	3
M24	**R0000630232**	**R0000630162**	19	36	44	4

Packaging: 12 pieces (for M8, M10).
8 pieces (for M12, M14, M16, M20, M24).

38716.Rexnord Catalog Marbett_8 - ENG R00-R41 Groen_v5.indd 13 18-09-18 08:27

Part. R0133

Fixing holes, obtainable by breaking "diaphragm".

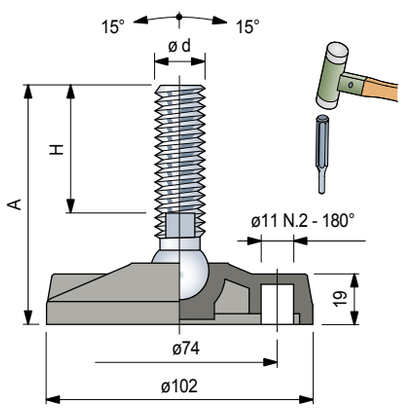

	ø d	A (mm)	H (mm)	Spindle type 1 (Ø14,2)	Spindle type 1a (Ø14,2)	Spindle type 3 (Ø24,5)	mm	Code (feet supplied without anti-slip)	Fmax. N
Spindle in stainless steel									
M16	100	64	-		1a	-	13	**633202**	12000
	115	81	-		1a	-	13	**633212**	
	160	124	-		1a	-	13	**633222**	
	185	151	-		1a	-	13	**633232**	
M20	120	84	-		1a	-	16	**633242**	
	185	149	-		1a	-	16	**633252**	
	245	208	-		1a	-	16	**627103**	
M24	250	209	-		1a	-	19	**627133**	
Spindle in zinc plated steel									
M16	95	61	-		1a	-	13	**633292**	12000
	150	116	-		1a	-	13	**633312**	
	185	151	-		1a	-	13	**633322**	
M20	185	150	-		1a	-	16	**633342**	
Spindle in reinforced polyamid (black) with steel pin									
M16	100	54	-		-	3	24	**627292**	6000

Item code for order = Part. + Code
- Footplate material: reinforced polyamide PA FV (black).
- Note: for spindles type 1 ball in reinforced polyamide.
- Packaging: 12 pieces.
- Anti-slip supplied separately.
- On request different length.
- Fmax. = maximum applicable load in static conditions.

Accessories

Anti-slip

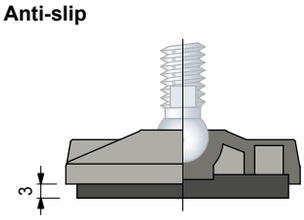

- Code: **R0000630052**.
- Material: NBR rubber (black), 70 Shore.
- Assembly: press-fit.
- Packaging: 12 pieces

Nut + Washer

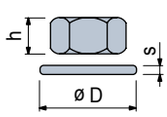

	Code: Stainless steel AISI 304	Code: Zinc plated steel	h mm	mm	øD mm	s mm
M12	**R0000630192**	**R0000630122**	10	19	24	2,5
M14	**R0000630202**	**R0000630132**	11	22	28	2,5
M16	**R0000630212**	**R0000630142**	13	24	30	3
M20	**R0000630222**	**R0000630152**	16	30	37	3
M24	**R0000630232**	**R0000630162**	19	36	44	4

Packaging: 12 pieces

Articulated Feet

in reinforced polyamide

Ø100

REXNORD

Part. R0133
Reinforced version

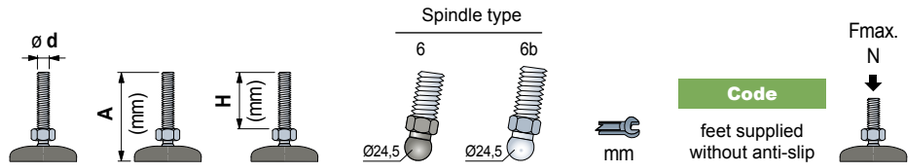

Spindle in stainless steel							
M12	150	103	6	-	19	**679251N**	13000
M14	150	103	6	-	19	**679311N**	
M16	150	109	-	6b	24	**627222**	
	185	144	-	6b	24	**627232**	
M24	220	179	-	6b	24	**627282**	
Spindle in zinc plated steel							
M16	195	154	-	6b	24	**627352**	13000

Item code for order = Part. + Code
- Footplate material: reinforced polyamide PA FV (black).
- Note: for spindles type 6 ball in reinforced polyamide.
- Packaging: 12 pieces.
- Anti-slip supplied separately.
- On request different length.
- Fmax. = maximum applicable load in static conditions.

Fixing holes, obtainable by breaking "diaphragm".

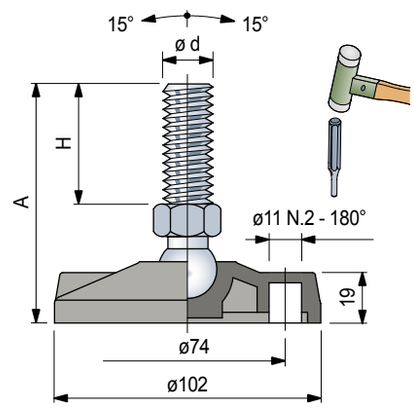

Accessories

Anti-slip

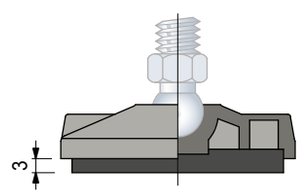

- Code: **R0000630052**.
- Material: NBR rubber (black), 70 Shore.
- Assembly: press-fit.
- Packaging: 12 pieces

Nut + Washer

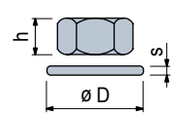

	Code					
	Stainless steel AISI 304	Zinc plated steel	h mm	mm	øD mm	s mm
M12	**R0000630192**	**R0000630122**	10	19	24	2,5
M14	**R0000630202**	**R0000630132**	11	22	28	2,5
M16	**R0000630212**	**R0000630142**	13	24	30	3
M20	**R0000630222**	**R0000630152**	16	30	37	3
M24	**R0000630232**	**R0000630162**	19	36	44	4

Packaging: 12 pieces

38716.Rexnord Catalog Marbett_8 - ENG R00-R41 Groen_v5.indd 15 18-09-18 08:27

Articulated Feet

in reinforced polyamide

Part. R0479

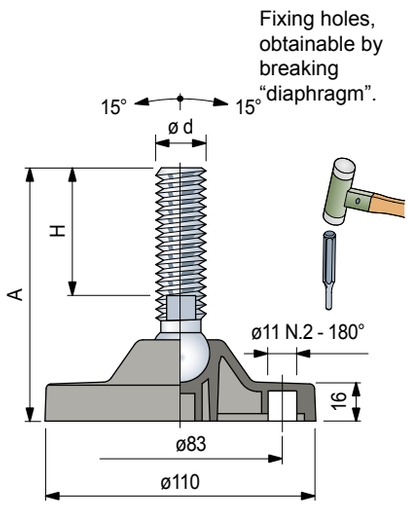

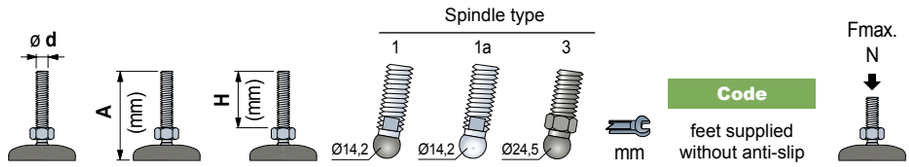

Spindle in stainless steel								
M16	110	64	-	1a	-	13	**633392**	15000
	125	81	-	1a	-	13	**633402**	
	170	124	-	1a	-	13	**633412**	
	195	151	-	1a	-	13	**633422**	
M20	130	84	-	1a	-	16	**633432**	
	195	149	-	1a	-	16	**633442**	
	255	208	-	1a	-	16	**627293**	
M24	260	209	-	1a	-	19	**627323**	

Spindle in zinc plated steel							
M16	105	61	-	1a	-	13	**633482**
	160	116	-	1a	-	13	**633502**
	195	151	-	1a	-	13	**633512**
M20	190	150	-	1a	-	16	**633532**
M24	195	146	-	1a	-	19	**633562**

Item code for order = Part. + Code
- Footplate material: reinforced polyamide PA FV (black).
- Note: for spindles type 1 ball in reinforced polyamide.
- Packaging: 12 pieces.
- Anti-slip supplied separately.
- On request different length.
- Fmax. = maximum applicable load in static conditions.

Accessories

Anti-slip

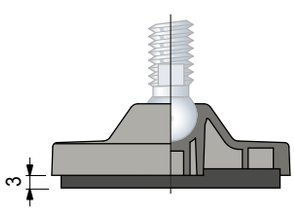

- Code: **R0000630062**.
- Material: NBR rubber (black), 70 Shore.
- Assembly: press-fit.
- Packaging: 12 pieces

Nut + Washer

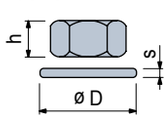

	Code					
	Stainless steel AISI 304	Zinc plated steel	h mm	mm	øD mm	s mm
M12	**R0000630192**	**R0000630122**	10	19	24	2,5
M14	**R0000630202**	**R0000630132**	11	22	28	2,5
M16	**R0000630212**	**R0000630142**	13	24	30	3
M20	**R0000630222**	**R0000630152**	16	30	37	3
M24	**R0000630232**	**R0000630162**	19	36	44	4

Packaging: 12 pieces

Articulated Feet

in reinforced polyamide

Ø110

REXNORD

Part. R0479
Reinforced version

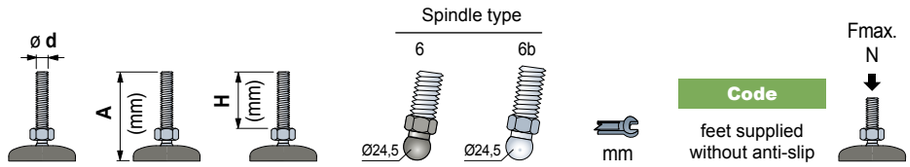

Spindle in stainless steel						
M16	160	109	-	6b	24	**627432**
	195	144	-	6b	24	**627442**
M24	230	179	-	6b	24	**627492**

Item code for order = Part. + Code
- Footplate material: reinforced polyamide PA FV (black).
- Note: for spindles type 6 ball in reinforced polyamide.
- Packaging: 12 pieces.
- Anti-slip supplied separately.
- On request different length.
- Fmax. = maximum applicable load in static conditions.

Fixing holes, obtainable by breaking "diaphragm".

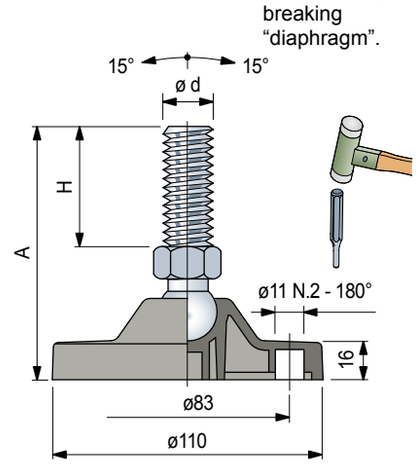

Accessories

Anti-slip

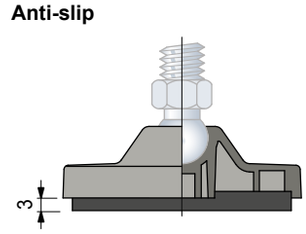

- Code: **R0000630062**.
- Material: NBR rubber (black), 70 Shore.
- Assembly: press-fit.
- Packaging: 12 pieces

Nut + Washer

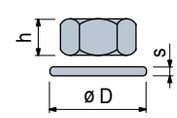

	Code					
	Stainless steel AISI 304	Zinc plated steel	h mm	mm	øD mm	s mm
M12	**R0000630192**	**R0000630122**	10	19	24	2,5
M14	**R0000630202**	**R0000630132**	11	22	28	2,5
M16	**R0000630212**	**R0000630142**	13	24	30	3
M20	**R0000630222**	**R0000630152**	16	30	37	3
M24	**R0000630232**	**R0000630162**	19	36	44	4

Packaging: 12 pieces

38716.Rexnord Catalog Marbett_8 - ENG R00-R41 Groen_v5.indd 17 18-09-18 08:27

Articulated Feet

in reinforced polyamide and polypropylene

Part. R0869

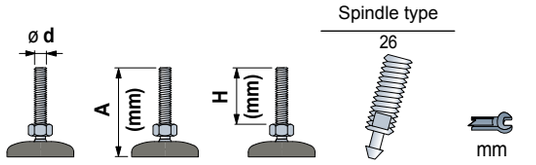

	ø d	A (mm)	H (mm)	Spindle type 26	mm	Footplate in polyamide PA FV (Code)	Footplate in polypropylene PP FV (Code)	Fmax. N
Spindle in stainless steel								
M16		200	140	26	13	**618933**	**619313**	45000 (PA FV) 13000 (PP FV)
M24		200	139	26	17	**618973**	**619353**	
		260	199	26	17	**618983**	**619363**	
Spindle in zinc plated steel								
M20		200	139	26	17	**619153**	**619533**	45000 (PA FV) 13000 (PP FV)
M24		350	287	26	19	**619243**	**619623**	

feet supplied without anti-slip

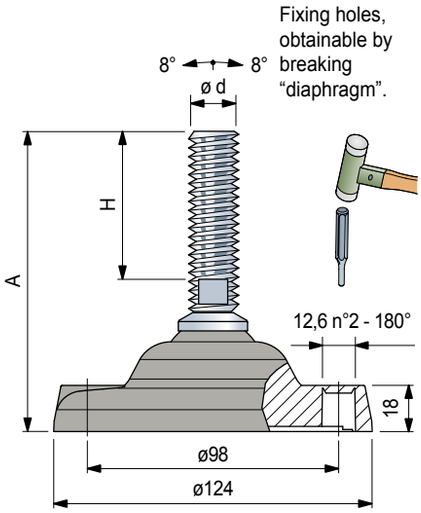

Item code for order = Part. + Code

- Footplate material: reinforced polyamide PA FV (black) and reinforced polypropylene PP FV (black).
- Packaging: 12 pieces.
- Anti-slip supplied separately (on request supplied fixed to the foot).
- On request different length.
- Fmax. = maximum applicable load in static conditions.

Accessories

Anti-slip

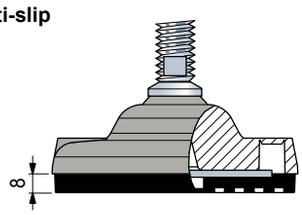

- Code with reinforcement disc: **R0000630082.**
- Code without reinforcement disc: **R0000630092.**
- Assembly: with screws for plate supplied loose.
- Material: NBR rubber (black), 80 Shore.
- Packaging: 12 pieces.

Nut + Washer

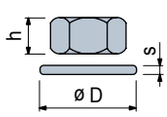

	Code: Stainless steel AISI 304	Code: Zinc plated steel	h mm	mm	øD mm	s mm
M16	**R0000630212**	**R0000630142**	13	24	30	3
M20	**R0000630222**	**R0000630152**	16	30	37	3
M24	**R0000630232**	**R0000630162**	19	36	44	4
M30	**R0000630242**	**R0000630172**	24	46	56	4

Packaging: 12 pieces

Part. R0726 - Spacer

- Code: **688772**.
- Material: acetal POM (black).
- Weight: 1,15 Kg.
- Packaging: 8 pieces.

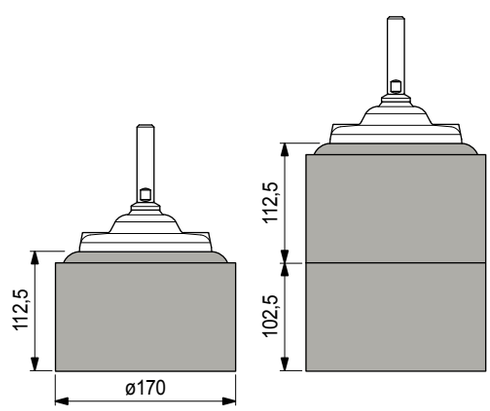

Articulated Feet

in reinforced polyamide and polypropylene

Ø124

REXNORD

Part. R0169

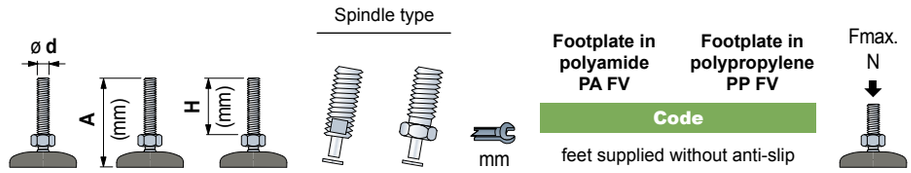

	A (mm)	H (mm)	Spindle type		mm	Footplate in polyamide PA FV (Code)	Footplate in polypropylene PP FV (Code)	Fmax. N
Spindle in stainless steel								
M20	205	146	-	22	30	**624812**	**628692**	45000 (PA FV) 13000 (PP FV)
M30	205	152	21	-	24	**624832**	**628712**	
Spindle in zinc plated steel								
M20	205	146	-	22	30	**624862**	**628742**	45000 (PA FV) 13000 (PP FV)
	255	195	-	22	30	**624872**	**628752**	
M24	205	152	21	-	19	**624892**	**628772**	

Item code for order = Part. + Code
- Footplate material: reinforced polyamide PA FV (black) and reinforced polypropylene PP FV (black).
- Packaging: 12 pieces.
- Anti-slip supplied separately (on request supplied fixed to the foot).
- On request different length.
- Fmax. = maximum applicable load in static conditions.

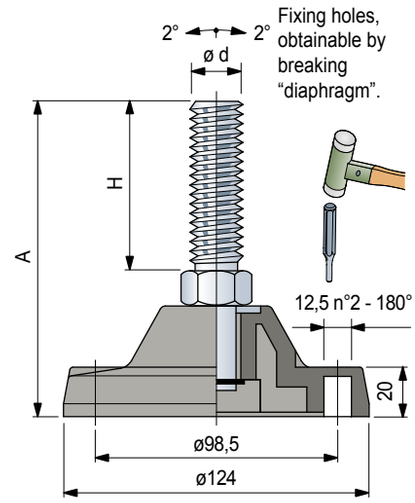

Accessories

Anti-slip

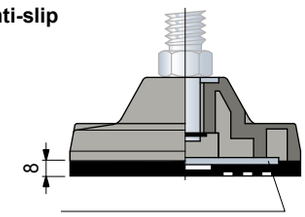

- Code with reinforcement disc: **R0000630082.**
- Code without reinforcement disc: **R0000630092.**
- Assembly: with screws for plate supplied loose.
- Material: NBR rubber (black), 80 Shore.
- Packaging: 12 pieces.

Part. R0726 - Spacer

- Code: **688772**.
- Material: acetal POM (black).
- Weight: 1,15 Kg.
- Packaging: 8 pieces.

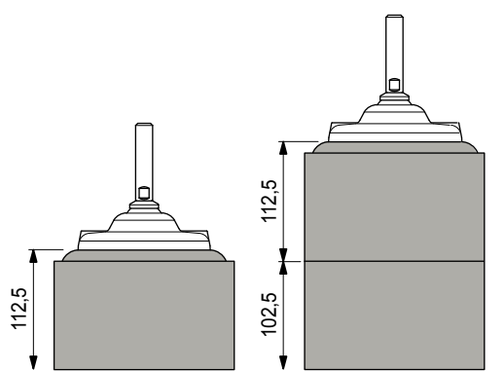

Nut + Washer

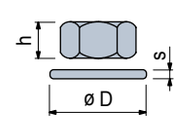

	Code: Stainless steel AISI 304	Code: Zinc plated steel	h mm	mm	øD mm	s mm
M16	**R0000630212**	**R0000630142**	13	24	30	3
M20	**R0000630222**	**R0000630152**	16	30	37	3
M24	**R0000630232**	**R0000630162**	19	36	44	4
M30	**R0000630242**	**R0000630172**	24	46	56	4

Packaging: 12 pieces

Articulated Feet

in reinforced polyamide

Part. R0134

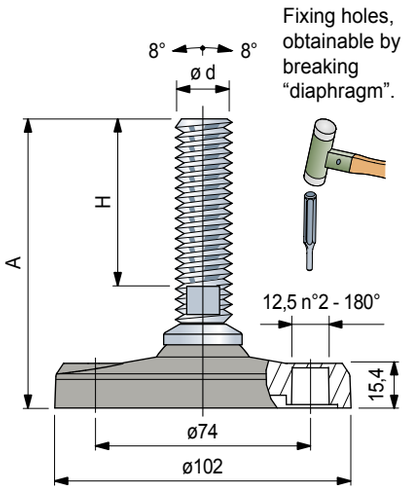

	ø d	A (mm)	H (mm)	Spindle type 26	mm	Code feet supplied without anti-slip	Fmax. N
Spindle in stainless steel							
	180	140	26	13		**627423**	20000
M20	180	139	26	17		**627433**	
Spindle in zinc plated steel							
M20	150	109	26	17		**627483**	20000

Item code for order = Part. + Code
- Footplate material: reinforced polyamide PA FV (black).
- Packaging: 12 pieces.
- Anti-slip supplied separately.
- On request different length.
- Fmax. = maximum applicable load in static conditions.

Accessories

Anti-slip

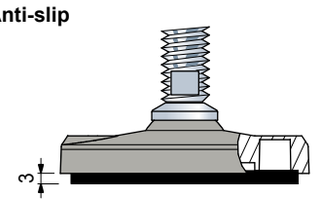

- Code: **R0000630052**.
- Material: NBR rubber (black), 70 Shore.
- Assembly: press-fit.
- Packaging: 12 pieces

Nut + Washer

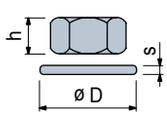

	Code Stainless steel AISI 304	Code Zinc plated steel	h mm	mm	øD mm	s mm
M16	**R0000630212**	**R0000630142**	13	24	30	3
M20	**R0000630222**	**R0000630152**	16	30	37	3
M24	**R0000630232**	**R0000630162**	19	36	44	4
M30	**R0000630242**	**R0000630172**	24	46	56	4

Packaging: 12 pieces

Articulated Feet

in reinforced polyamide

Ø124

REXNORD

Part. R0297

ø d	A (mm)	H (mm)	Spindle type 27	mm	Code feet supplied without anti-slip	Fmax. N
Spindle in stainless steel						
M16	210	140	27	13	**629192N1**	45000
M20	210	140	27	17	**629202N1**	
M30	195	125	27	24	**629212N1**	
	250	180	27	24	**629222N1**	
Spindle in zinc plated steel						
M20	205	140	27	17	**629242N1**	
M30	195	125	27	24	**629252N1**	
	250	180	27	24	**629262N1**	

Item code for order = Part. + Code
- Footplate material: reinforced polyamide PA FV (black).
- Packaging: 12 pieces.
- Anti-slip supplied separately (on request supplied fixed to the foot).
- On request different length.
- Fmax. = maximum applicable load in static conditions.

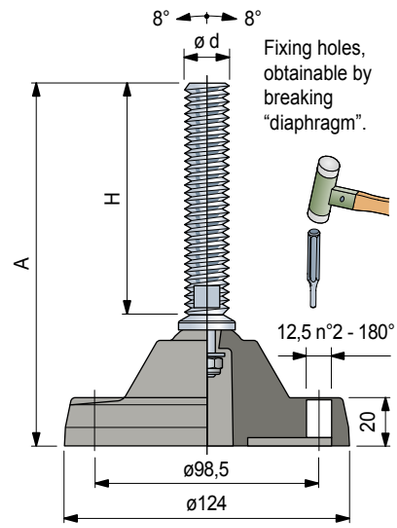

Accessories

Anti-slip

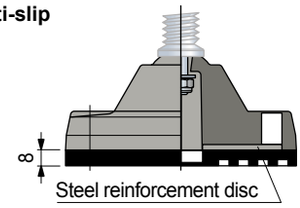

- Code with reinforcement disc: **R0000630082**.
- Code without reinforcement disc: **R0000630092**.
- Assembly: with screws for plate supplied loose.
- Material: NBR rubber (black), 80 Shore.
- Packaging: 12 pieces.

Part. R0726 - Spacer

- Code: **688772**.
- Material: acetal POM (black).
- Weight: 1,15 Kg.
- Packaging: 8 pieces.

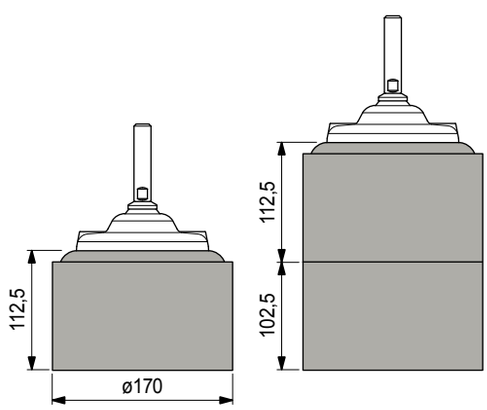

Nut + Washer

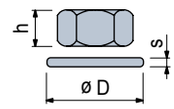

	Code Stainless steel AISI 304	Code Zinc plated steel	h mm	mm	øD mm	s mm
M16	**R0000630212**	**R0000630142**	13	24	30	3
M20	**R0000630222**	**R0000630152**	16	30	37	3
M24	**R0000630232**	**R0000630162**	19	36	44	4
M30	**R0000630242**	**R0000630172**	24	46	56	4

Packaging: 12 pieces

38716.Rexnord Catalog Marbett_8 - ENG R00-R41 Groen_v5.indd 21 18-09-18 08:27

Articulated Feet Gripper

in reinforced polypropylene

Part. R0626

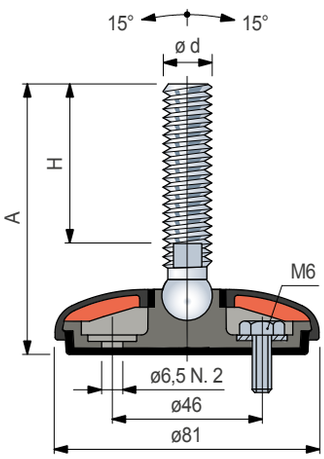

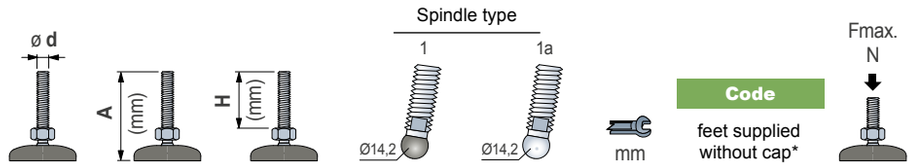

	ø d	A (mm)	H (mm)	Spindle type 1	Spindle type 1a	mm	Code	Fmax. N
Spindle in stainless steel								
M16	100	64	-		1a	13	**641722**	10000
	115	81	-		1a	13	**641732**	
	160	124	-		1a	13	**641742**	
	185	151	-		1a	13	**641752**	
M20	120	84	-		1a	16	**641762**	
	185	149	-		1a	16	**641772**	
Spindle in zinc plated steel								
M16	95	61	-		1a	13	**641812**	10000
	150	116	-		1a	13	**641832**	
	185	151	-		1a	13	**641842**	
M20	185	150	-		1a	16	**641872**	

Item code for order = Part. + Code

* = Feet are supplied without protection caps. Caps have to be ordered separately, indicating selected colour.
- Base material: reinforced polypropylene with integrated anti-slip in thermoplastic rubber grey (70 Shore).
- The sealing of the internal structure guarantees a better hygiene.
- Feet can be fixed to the floor.
- Note: for spindles type 1 ball in reinforced polyamide.
- Packaging: 24 pieces.
- On request different length.
- Fmax. = maximum applicable load in static conditions.

Protection cap

Color	Code
Black	**R0626641952**

- Material: polypropylene PP.
- Packaging: 24 pieces.

Accessories

Nut + Washer

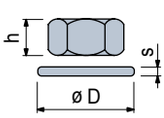

	Code					
	Stainless steel AISI 304	Zinc plated steel	h mm	mm	øD mm	s mm
M16	**R0000630212**	**R0000630142**	13	24	30	3
M20	**R0000630222**	**R0000630152**	16	30	37	3

Packaging: 12 pieces (for M10).
8 pieces (for M12, M14, M16, M20, M24)

Articulated Feet Gripper

in reinforced polypropylene

Ø80

REXNORD

Part. R0626

ø d	A (mm)	H (mm)	Spindle type 2b (Ø14,2)	mm	Code	Fmax. N
Spindle in stainless steel						
M12	85	55	2b	14	641402	10000

feet supplied without cap*

Item code for order = Part. + Code

* = Feet are supplied without protection caps. Caps have to be ordered separately, indicating selected colour.
- Base material: reinforced polypropylene with integrated anti-slip in thermoplastic rubber grey (70 Shore).
- The sealing of the internal structure guarantees a better hygiene.
- Feet can be fixed to the floor.
- Packaging: 24 pieces.
- On request different length.
- Fmax. = maximum applicable load in static conditions.

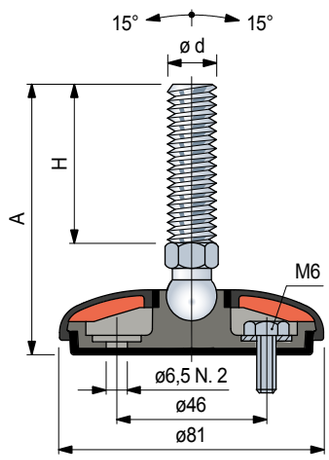

Protection cap

Color	Code
Black	**R0626641952**

- Material: polypropylene PP.
- Packaging: 24 pieces.

Accessories

Nut + Washer

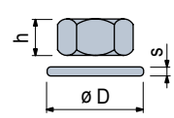

	Code					
	Stainless steel AISI 304	Zinc plated steel	h mm	mm	øD mm	s mm
M12	**R0000630192**	**R0000630122**	10	19	24	2,5

Packaging: 12 pieces (for M10).
8 pieces (for M12, M14, M16, M20, M24)

38716.Rexnord Catalog Marbett_8 - ENG R00-R41 Groen_v5.indd 23 18-09-18 08:27

Articulated Feet Gripper

in stainless steel

Part. R0627

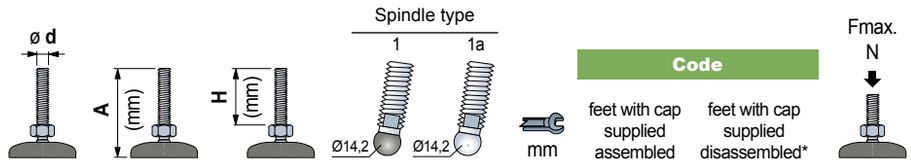

Spindle in stainless steel						Code: feet with cap supplied assembled	Code: feet with cap supplied disassembled*	
M16	100	64	-	1a	13	**642112**	**647332**	10000
	115	81	-	1a	13	**642122**	**647342**	
	160	124	-	1a	13	**642132**	**647352**	
	185	151	-	1a	13	**642142**	**647362**	
M20	120	84	-	1a	16	**642152**	**647372**	
	185	149	-	1a	16	**642162**	**647382**	

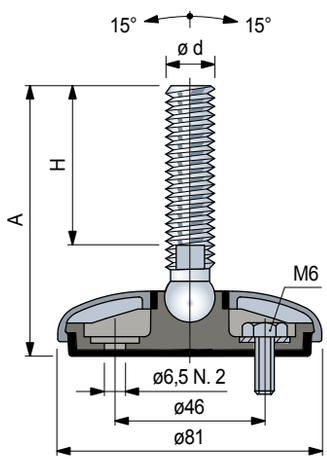

Item code for order = Part. + Code

* = Feet can be fixed to the floor.
- Protection cap material: stainless steel AISI 304.
- Base material: reinforced polypropylene with integrated anti-slip in thermoplastic rubber grey (70 Shore).
- The sealing of the internal structure guarantees a better hygiene.
- Note: for spindles type 1 ball in reinforced polyamide.
- Packaging: 12 pieces.
- On request different length.
- Fmax. = maximum applicable load in static conditions.

Accessories

Nut + Washer

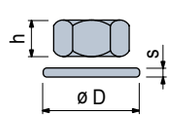

	Code: Stainless steel AISI 304	h mm	mm	øD mm	s mm
M16	**R0000630212**	13	24	30	3
M20	**R0000630222**	16	30	37	3

Packaging: 12 pieces (for M10).
8 pieces (for M12, M14, M16, M20, M24)

Articulated Feet Gripper

in stainless steel

Ø80

REXNORD

Part. R0627

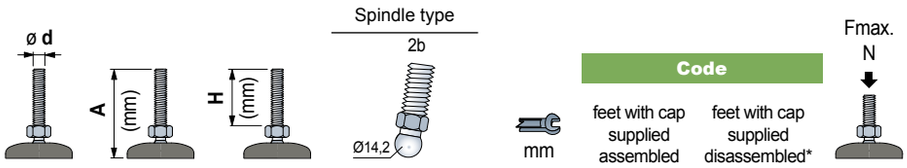

Spindle in stainless steel							
M12	85	55	2b	14	**641982**	**647302**	10000

Item code for order = Part. + Code

* = Feet can be fixed to the floor.
- Protection cap material: stainless steel AISI 304.
- Base material: reinforced polypropylene with integrated anti-slip in thermoplastic rubber grey (70 Shore).
- The sealing of the internal structure guarantees a better hygiene.
- Note: for spindles type 1 ball in reinforced polyamide.
- Packaging: 12 pieces.
- On request different length.
- Fmax. = maximum applicable load in static conditions.

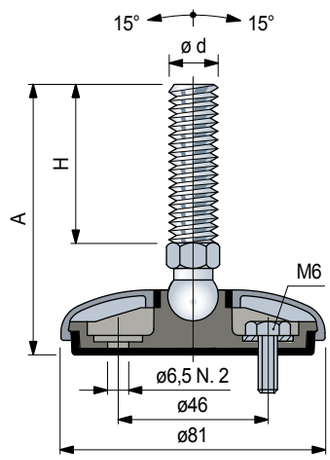

Accessories

Nut + Washer

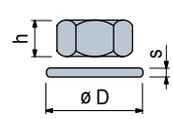

	Code Stainless steel AISI 304	h mm	mm	øD mm	s mm
M10	**R0000630182**	8	17	21	2
M12	**R0000630192**	10	19	24	2,5
M14	**R0000630202**	11	22	28	2,5
M16	**R0000630212**	13	24	30	3
M20	**R0000630222**	16	30	37	3
M24	**R0000630232**	19	36	44	4

Packaging: 12 .

Articulated Feet Gripper

in reinforced polypropylene

Part. R0622

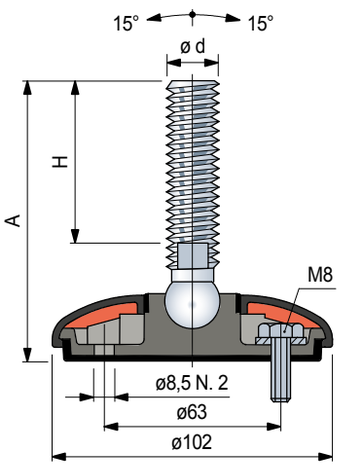

	ø d	A (mm)	H (mm)	Spindle type 1a (Ø14,2)	mm	Code feet supplied without cap*	Fmax. N
Spindle in stainless steel							
M16	105	64	1a		13	**643552**	19500
	120	81	1a		13	**643562**	
	165	124	1a		13	**643572**	
	190	151	1a		13	**643582**	
M20	125	84	1a		16	**643592**	
	190	149	1a		16	**643602**	
Spindle in zinc plated steel							
M16	100	61	1a		13	**643632**	19500
	155	116	1a		13	**643652**	
	190	151	1a		13	**643662**	
M20	190	150	1a		16	**643682**	

Item code for order = Part. + Code

* = Feet are supplied without protection caps. Caps have to be ordered separately, indicating selected colour.
- Base material: reinforced polypropylene with integrated anti-slip in thermoplastic rubber grey (70 Shore).
- The sealing of the internal structure guarantees a better hygiene.
- Feet can be fixed to the floor.
- Packaging: 12 pieces.
- On request different length.
- Fmax. = maximum applicable load in static conditions.

Protection cap

Color	Code
Black	**R0622639412**

- Material: polypropylene PP.
- Packaging: 24 pieces.

Accessories

Nut + Washer

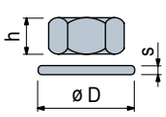

	Code Stainless steel AISI 304	Code Zinc plated steel	h mm	mm	øD mm	s mm
M16	**R0000630212**	**R0000630142**	13	24	30	3
M20	**R0000630222**	**R0000630152**	16	30	37	3

Packaging: 12 pieces.

Articulated Feet Gripper

in reinforced polypropylene

Ø100

REXNORD

Part. R0622

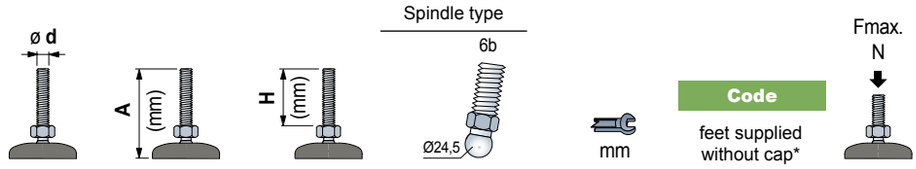

Spindle in stainless steel						
M16	150	109	6b	24	**637272**	19500
	185	144	6b	24	**637282**	
Spindle in zinc plated steel						
M16	195	154	6b	24	**637372**	19500

Item code for order = Part. + Code

* = Feet are supplied without protection caps. Caps have to be ordered separately, indicating selected colour.
- Base material: reinforced polypropylene with integrated anti-slip in thermoplastic rubber grey (70 Shore).
- The sealing of the internal structure guarantees a better hygiene.
- Feet can be fixed to the floor.
- Packaging: 12 pieces.
- On request different length.
- Fmax. = maximum applicable load in static conditions.

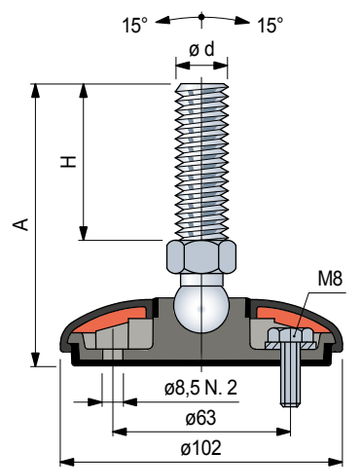

Protection cap

Color	Code
Black	**R0622639412**

- Material: polypropylene PP.
- Packaging: 12 pieces.

Accessories

Nut + Washer

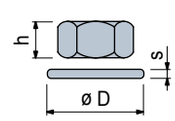

	Code					
	Stainless steel AISI 304	Zinc plated steel	h mm	mm	øD mm	s mm
M16	**R0000630212**	**R0000630142**	13	24	30	3

Packaging: 12 pieces.

38716.Rexnord Catalog Marbett_8 - ENG R00-R41 Groen_v5.indd 27 18-09-18 08:27

Articulated Feet Gripper

in stainless steel

Part. R0623

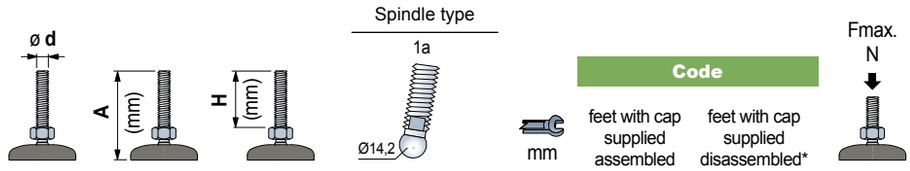

Spindle in stainless steel							
M16	105	64	1a	13	**643732**	**647412**	19500
	120	81	1a	13	**643742**	**647442**	
	165	124	1a	13	**643752**	**647472**	
	190	151	1a	13	**643762**	**647502**	
M20	125	84	1a	16	**643772**	**647552**	
	190	149	1a	16	**643782**	**647582**	

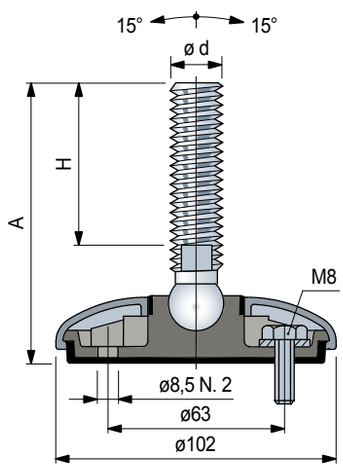

Item code for order = Part. + Code

* = Feet can be fixed to the floor.
- Protection cap material: stainless steel AISI 304.
- Base material: reinforced polypropylene with integrated anti-slip in thermoplastic rubber grey (70 Shore).
- The sealing of the internal structure guarantees a better hygiene.
- Note: for spindles type 1 ball in reinforced polyamide.
- Packaging: 12 pieces.
- On request different length.
- Fmax. = maximum applicable load in static conditions.

Accessories

Nut + Washer

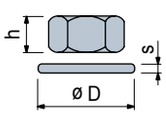

	Code Stainless steel AISI 304	h mm	mm	øD mm	s mm
M16	**R0000630212**	13	24	30	3
M20	**R0000630222**	16	30	37	3

Packaging: 12 pieces

Articulated Feet Gripper

in stainless steel

Ø100

REXNORD

Part. R0623

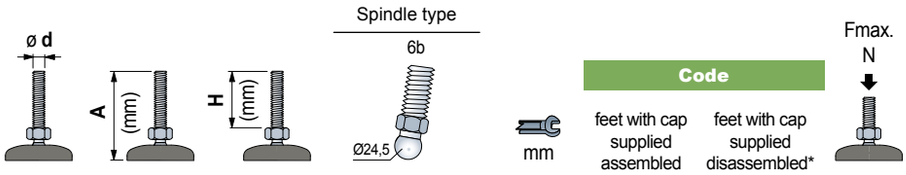

Spindle in stainless steel					Code: feet with cap supplied assembled	Code: feet with cap supplied disassembled*	
M16	150	109	6b	24	**637522**	**647452**	19500
	185	144	6b	24	**637532**	**647482**	
	220	179	6b	24	**637582**	**647622**	

Item code for order = Part. + Code

* = Feet can be fixed to the floor.
- Protection cap material: stainless steel AISI 304.
- Base material: reinforced polypropylene with integrated anti-slip in thermoplastic rubber grey (70 Shore).
- The sealing of the internal structure guarantees a better hygiene.
- Note: for spindles type 1 ball in reinforced polyamide.
- Packaging: 12 pieces.
- On request different length.
- Fmax. = maximum applicable load in static conditions.

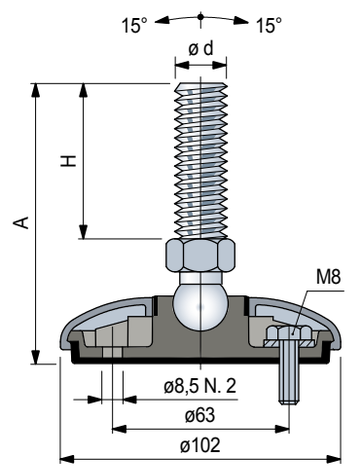

Accessories

Nut + Washer

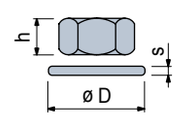

	Code: Stainless steel AISI 304	h mm	mm	øD mm	s mm
M16	**R0000630212**	13	24	30	3

Packaging: 12 pieces

38716.Rexnord Catalog Marbett_8 - ENG R00-R41 Groen_v5.indd 29 18-09-18 08:27

Articulated Feet Gripper

in reinforced polypropylene

Part. R0628

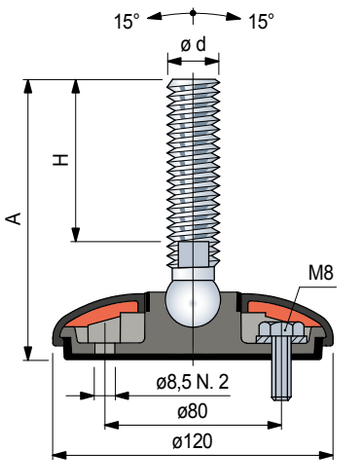

	ø d	A (mm)	H (mm)	Spindle type	mm	Code (feet supplied without cap*)	Fmax. N
Spindle in stainless steel							
M16	110	64	1a	1a	13	**643812**	22000
	125	81	1a	1a	13	**643822**	
	170	124	1a	1a	13	**643832**	
	195	151	1a	1a	13	**643842**	
M20	130	84	1a	1a	16	**643852**	
	195	149	1a	1a	16	**643862**	
Spindle in zinc plated steel							
M16	105	61	1a	1a	13	**643892**	22000
	160	116	1a	1a	13	**643912**	
	195	151	1a	1a	13	**643922**	
M20	195	150	1a	1a	16	**643942**	

Item code for order = Part. + Code

* = Feet are supplied without protection caps. Caps have to be ordered separately, indicating selected colour.
- Base material: reinforced polypropylene with integrated anti-slip in thermoplastic rubber grey (70 Shore).
- The sealing of the internal structure guarantees a better hygiene.
- Feet can be fixed to the floor.
- Packaging: 12 pieces.
- On request different length.
- Fmax. = maximum applicable load in static conditions.

Protection cap

Color	Code
Black	**R0628643102**

- Material: polypropylene PP.
- Packaging: 12 pieces.

Accessories

Nut + Washer

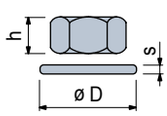

	Code: Stainless steel AISI 304	Code: Zinc plated steel	h mm	mm	øD mm	s mm
M16	**R0000630212**	**R0000630142**	13	24	30	3
M20	**R0000630222**	**R0000630152**	16	30	37	3

Packaging: 12 pieces.

Articulated Feet Gripper

in reinforced polypropylene

Ø120

REXNORD

Part. R0628

	ø d	A (mm)	H (mm)	Spindle type	mm	Code (feet supplied without cap*)	Fmax. N
Spindle in stainless steel							
M16		155	109	6b	24	**642462**	22000
		190	144	6b	24	**642482**	
M20		225	179	6b	24	**642582**	
Spindle in zinc plated steel							
M16		200	154	6b	24	**642662**	22000

Item code for order = Part. + Code

* = Feet are supplied without protection caps. Caps have to be ordered separately, indicating selected colour.
- Base material: reinforced polypropylene with integrated anti-slip in thermoplastic rubber grey (70 Shore).
- The sealing of the internal structure guarantees a better hygiene.
- Feet can be fixed to the floor.
- Packaging: 12 pieces.
- On request different length.
- Fmax. = maximum applicable load in static conditions.

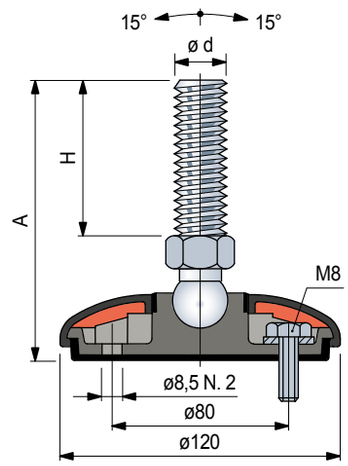

Protection cap

Color	Code
Black	**R0628643102**

- Material: polypropylene PP.
- Packaging: 12 pieces.

Accessories

Nut + Washer

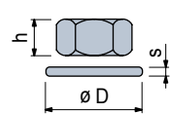

	Code: Stainless steel AISI 304	Code: Zinc plated steel	h mm	mm	øD mm	s mm
M16	**R0000630212**	**R0000630142**	13	24	30	3
M20	**R0000630222**	**R0000630152**	16	30	37	3

Packaging: 16 pieces.

38716.Rexnord Catalog Marbett_8 - ENG R00-R41 Groen_v5.indd 31 18-09-18 08:27

Articulated Feet Gripper

in stainless steel

Part. R0629

Spindle in stainless steel	ø d	A (mm)	H (mm)	Spindle type	mm	Code: feet with cap supplied assembled	Code: feet with cap supplied disassembled*	Fmax. N
M16	110	64	1a	1a	13	**643992**	**647652**	22000
	125	81	1a	1a	13	**644002**	**647682**	
	170	124	1a	1a	13	**644012**	**647712**	
	195	151	1a	1a	13	**644022**	**647742**	
M20	130	84	1a	1a	16	**644032**	**647792**	
	195	149	1a	1a	16	**644042**	**647822**	

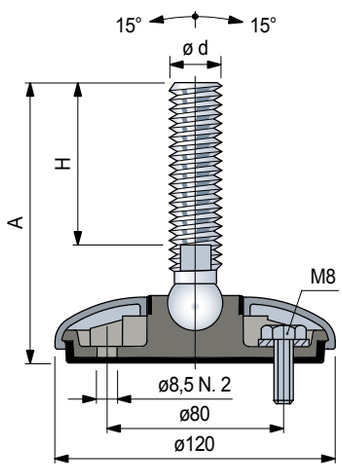

Item code for order = Part. + Code

* = Feet can be fixed to the floor.
- Base material: reinforced polypropylene with integrated anti-slip in thermoplastic rubber grey (70 Shore).
- The sealing of the internal structure guarantees a better hygiene.
- Feet can be fixed to the floor.
- Packaging: 12 pieces.
- On request different length.
- Fmax. = maximum applicable load in static conditions.

Accessories

Nut + Washer

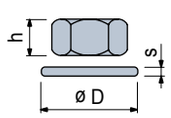

	Code: Stainless steel AISI 304	h mm	mm	øD mm	s mm
M16	**R0000630212**	13	24	30	3
M20	**R0000630222**	16	30	37	3

Packaging: 12 pieces

38716.Rexnord Catalog Marbett_8 - ENG R00-R41 Groen_v5.indd 32 18-09-18 08:27

Articulated Feet Gripper

in stainless steel

Ø120

REXNORD

Part. R0629

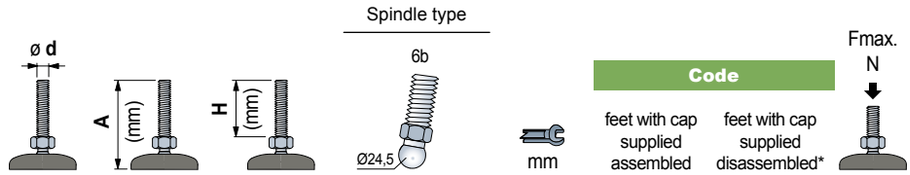

Spindle in stainless steel							
M16	155	109	6b	24	**642302**	**647692**	22000
	190	144	6b	24	**642322**	**647722**	
M24	225	179	6b	24	**642422**	**647862**	

Item code for order = Part. + Code

* = Feet can be fixed to the floor.
- Base material: reinforced polypropylene with integrated anti-slip in thermoplastic rubber grey (70 Shore).
- The sealing of the internal structure guarantees a better hygiene.
- Feet can be fixed to the floor.
- Packaging: 12 pieces.
- On request different length.
- Fmax. = maximum applicable load in static conditions.

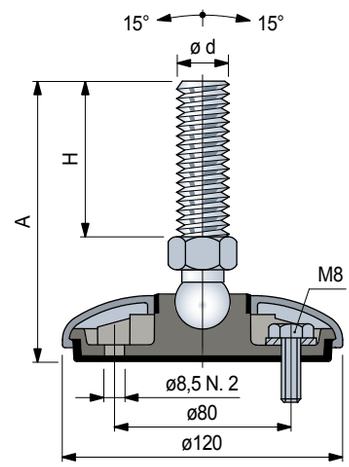

Accessories

Nut + Washer

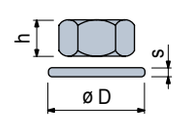

	Code Stainless steel AISI 304	h mm	 mm	øD mm	s mm
M16	**R0000630212**	13	24	30	3
M24	**R0000630232**	19	36	44	4

Packaging: 12 pieces

Part. R0349 4 holes

Part. R0349 4 holes

	ø d	A (mm)	H (mm)	ø Df mm	s mm	Spindle type 27	mm	Code	F max. (N)
Feet in stainless steel									
M16		180	140	9	3	27	13	**682721N1**	6000
M20		180	140	9	3	27	17	**68165N1**	
M30		165	125	9	3	27	24	**63757N1**	
		225	180	9	3	27	24	**682741N1**	
Feet in zinc plated steel									
M20		175	140	9	4	27	17	**65634N1**	10000
M24		220	175	9	4	27	19	**65054N1**	
M30		165	125	9	4	27	24	**65644N1**	
		220	180	9	4	27	24	**682711N1**	

Item code for order = Part. + Code
- Packaging: 8 pieces.
- On request different length.
- Fmax. = maximum applicable load in static conditions.

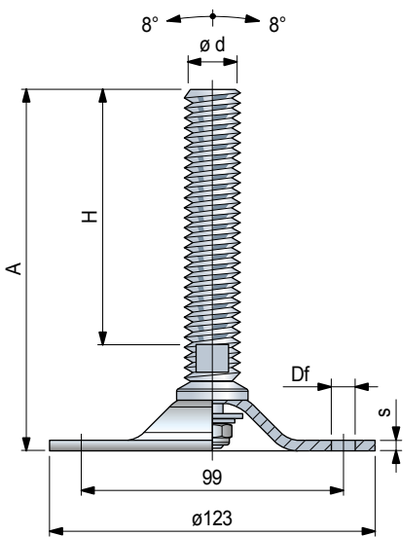

Accessories

Nut + Washer

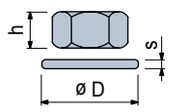

	Code Stainless steel AISI 304	Code Zinc plated steel	h mm	mm	øD mm	s mm
M16	**R0000630212**	**R0000630142**	13	24	30	3
M20	**R0000630222**	**R0000630152**	16	30	37	3
M24	**R0000630232**	**R0000630162**	19	36	44	4
M30	**R0000630242**	**R0000630172**	24	46	56	4

Packaging: 12 pieces.

Articulated feet

in painted steel

Ø160

REXNORD

Part. R0408

	ø d	A (mm)	H (mm)	Spindle type 27	mm	Code	F max. (N)
Spindle in stainless steel							
M24		220	175	27	19	**678851N1**	50000
M16		180	140	27	13	**678831N1**	50000
M20		180	140	27	17	**678841N1**	
M30		165	125	27	24	**678861N1**	
		225	180	27	24	**678881N1**	
Spindle in zinc plated steel							
M20		175	140	27	17	**678771N1**	
M24		220	175	27	19	**678801N1**	
M30		165	125	27	24	**678811N1**	
		220	180	27	24	**678821N1**	

Item code for order = Part. + Code
- Material: footplate in painted steel yellow. Anti-slip in NBR rubber black (70 Shore).
- Packaging: 4 pieces.
- On request different length.
- Fmax. = maximum applicable load in static conditions.

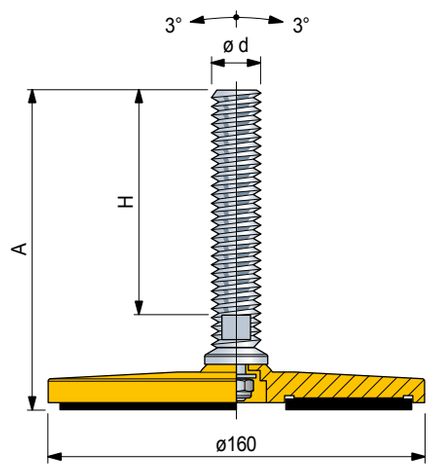

Accessories

Nut + Washer

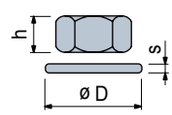

	Code: Stainless steel AISI 304	Code: Zinc plated steel	h mm	mm	øD mm	s mm
M16	**R0000630212**	**R0000630142**	13	24	30	3
M20	**R0000630222**	**R0000630152**	16	30	37	3
M24	**R0000630232**	**R0000630162**	19	36	44	4
M30	**R0000630242**	**R0000630172**	24	46	56	4

Packaging: 12 pieces.

Articulated feet

in stainless steel

Part. R0747
Part. R0748
Part. R0747

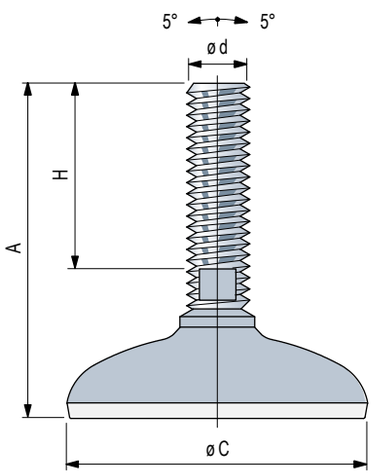

Feet in stainless steel		Ø C mm	A (mm)	H (mm)	mm	Code	F max. (N)
ø 80	M16	182	136	13		602013	25000
	M20	187	139	16		602023	
	M30	215	165	27		620803	

Part. R0748

Feet in stainless steel		Ø C mm	A (mm)	H (mm)	mm	Code	F max. (N)
ø100	M16	185	136	13		602053	25000
	M20	190	139	16		602063	
	M24	220	167	19		602073	
	M30	218	165	27		620823	

Part. R0749

Feet in stainless steel		Ø C mm	A (mm)	H (mm)	mm	Code	F max. (N)
ø120	M16	190	136	13		602093	25000
	M20	195	139	16		602103	
	M30	223	165	27		620843	
		250	200	27		616433	50000

Item code for order = Part. + Code

- Material:
  Spindle in austenitic stainless steel.
  Footplate in austenitic stainless steel.
  Anti-slip in vulcanized NBR rubber (grey), 75 Shore;
  Part R0749616433 - R0749628033 anti-slip in vulcanized NBR rubber NBR (black), 95 Shore.
- Packaging: 4 pieces.
- On request different length.
- Fmax. = maximum applicable load in static conditions.

Accessories

Nut + Washer

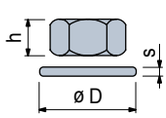

	Code Stainless steel AISI 304	h mm	mm	øD mm	s mm
M16	R0000630212	13	24	30	3
M20	R0000630222	16	30	37	3
M24	R0000630232	19	36	44	4
M30	R0000630242	24	46	56	4

Packaging: 12 pieces

Articulated feet

in stainless steel

REXNORD

Part. R0747F
Part. R0748F

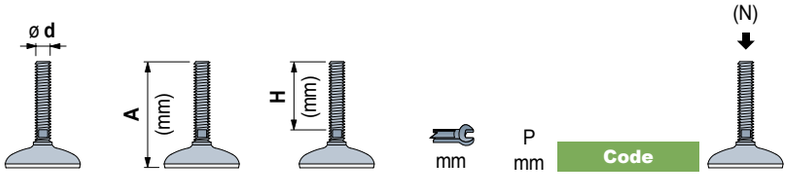

	Ø C mm	A (mm)	H (mm)	mm	P mm	Code	F max. (N)
Feet in stainless steel							
ø 80	**M16**	182	136	13	55	**616063**	25000
	M20	187	139	16	55	**616073**	
	M30	215	165	27	55	**620863**	

Part. R0748F

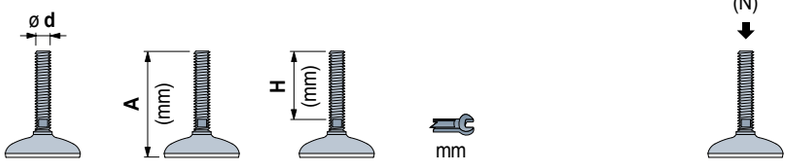

	Ø C mm	A (mm)	H (mm)	mm		Code	F max. (N)
Feet in stainless steel							
ø 100	**M16**	185	136	13	67	**616103**	25000
	M20	190	139	16	67	**616113**	
	M24	220	167	19	67	**616123**	
	M30	218	165	27	67	**620883**	

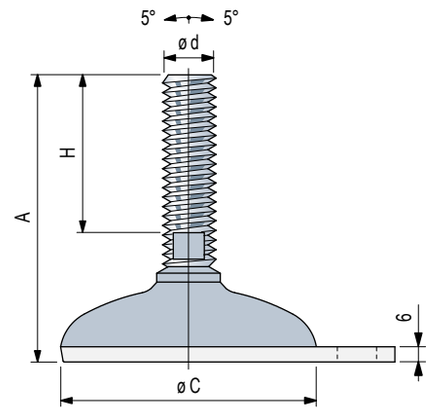

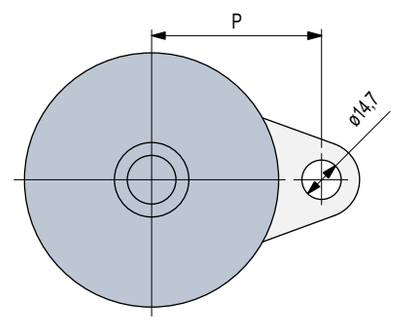

Item code for order = Part. + Code

- Material:
  Spindle in austenitic stainless steel.
  Footplate in austenitic stainless steel.
  Anti-slip in vulcanized NBR rubber (grey), 75 Shore.
- Packaging: 4 pieces.
- On request different length.
- Fmax. = maximum applicable load in static conditions.

Accessories

Nut + Washer

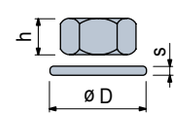

	Code Stainless steel AISI 304	h mm	mm	øD mm	s mm
M16	**R0000630212**	13	24	30	3
M20	**R0000630222**	16	30	37	3
M24	**R0000630232**	19	36	44	4
M30	**R0000630242**	24	46	56	4

Packaging: 12 pieces

Part. R0750S

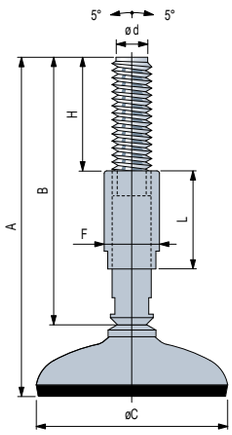

Part. R0750S

Ø C mm	ø d	A (mm)	B (mm)	H (mm)	Ø F mm	L mm	mm	Code	F max. (N)
Feet in stainless steel									
ø 80	**M16**	200	165	100	23	55	13	**613603**	25000

Item code for order = Part. + Code
- Material:
  Spindle and threaded bushing in austenitic stainless steel.
  Footplate in austenitic stainless steel.
  Anti-slip in vulcanized NBR rubber (black), 95 Shore.
- Packaging: 4 pieces.
- Fmax. = maximum applicable load in static conditions.

Part. R0750SF

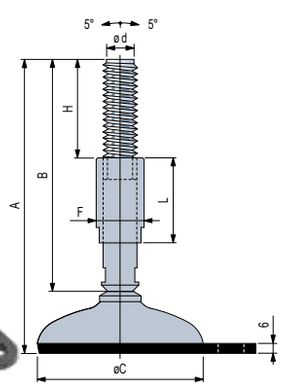

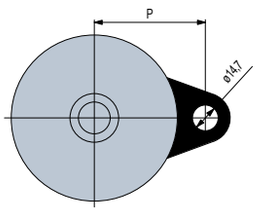

Part. R0750SF

Ø C mm	ø d	A (mm)	B (mm)	H (mm)	Ø F mm	L mm	mm	P mm	Code	F max. (N)
Feet in stainless steel										
ø 80	**M16**	200	165	100	23	55	13	55	**616173**	25000

Item code for order = Part. + Code
- Material:
  Spindle and threaded bushing in austenitic stainless steel.
  Footplate in austenitic stainless steel.
  Anti-slip in vulcanized NBR rubber (black), 95 Shore.
- Packaging: 4 pieces.
- Fmax. = maximum applicable load in static conditions.

Fixed feet

in painted steel

Ø100

REXNORD

Part. R0406

ø d	A (mm)	H (mm)	mm	Code	Fmax. N
Feet in zinc plated steel					
M16	157	127	10	**66614**	50000

Item code for order = Part. + Code

- Material: footplate in painted steel yellow. Anti-slip in NBR rubber black (80 Shore).
- Packaging: 4 pieces.
- On request different length.
- Fmax. = maximum applicable load in static conditions.

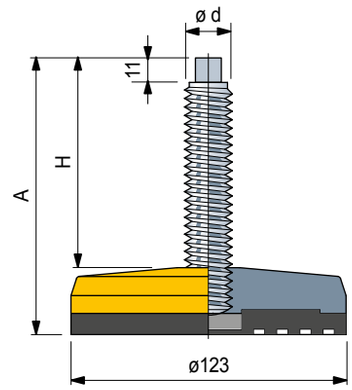

Accessories

Nut + Washer

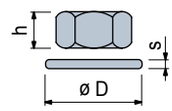

	Code Zinc plated steel	h mm	mm	øD mm	s mm
M16	**R0000630142**	13	24	30	3

Packaging: 4 pieces

Part. R0180

Tube dimensions

Outside dia. mm	Outside dia. Poll"	Thickness mm	Inside dia. mm	Thread D	D1 mm	D2 mm	H mm	L mm	M mm	Code	Fmax. N
48,3	1 1/2	1,5	45,3	**M16**	48	45,5	10	52	24	**63081**	5000
54	-	2	50	**M16**	54	50,8	10	62	24	**647081**	5000
60,3	2	2	56,3	**M16**	60	57	10	62	24	**65174**	5000

- Material: bushing in reinforced polyamid PA FV (black). Threaded insert in nickel plated brass.
- Packaging: 12 pieces.
- Fmax. = maximum applicable load in static conditions.

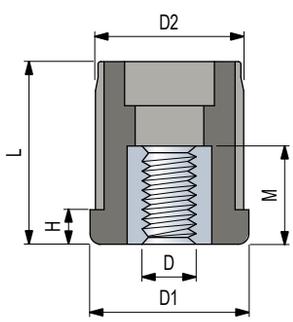

Tube dimensions B.S.I.

Outside dia. Inch	Outside dia. mm	Thickness Inch	Thickness mm	Inside dia. mm	Thread D	D1 mm	D2 mm	H mm	L mm	M mm	Code	Fmax. N
2"	50,8	0,065"	1,65	47,5	**M16**	50	48,4	10	56	24	**668191**	5000

Item code for order = Part. + Code
- Material: bushing in reinforced polyamid PA FV (black). Threaded insert in nickel plated brass.
- Packaging: 12 pieces.
- Fmax. = maximum applicable load in static conditions.

Assembly

Pressure fitted.
Interference fit.

Threaded bushings

for square tubes

REXNORD

Part. R0224

Metric tube dimensions

Outside dia. mm	Thickness mm	Inside dia. mm	Thread D	D_1 mm	D_2 mm	H mm	L mm	M mm	Code	Fmax. N
⧄ **40**	1,5	37	**M12**	40	37,5	8	43	19	**63882**	5000
			M16	40	37,5	8	43	24	**63902**	5000
	2	36	**M16**	40	36,5	8	43	24	**66533**	5000
			M20	40	36,5	8	43	30	**64455**	8000
⧄ **50**	1,5	47	**M16**	50	47,8	10	55	24	**68607**	5000
			M20	50	47,5	10	55	30	**68883**	8000
			3/8”-16	50	47,8	10	55	19	**692781**	5000
			1/2”-13	50	47,8	10	55	19	**692791**	5000
			5/8”-11	50	47,8	10	55	24	**692801**	5000
			3/4”-10	50	47,8	10	55	30	**692811**	8000
	2	46	**M16**	50	47	10	55	24	**617632**	5000
			M20	50	47	10	55	30	**617642**	8000
	2,5	45	**M14**	50	45,6	10	55	24	**695411**	5000
			M16	50	45,5	10	55	24	**63051**	5000
			M20	50	45,5	10	55	30	**63001**	8000

- Material: bushing in reinforced polyamid PA FV (black). Threaded insert in nickel plated brass.
- Packaging: 12 pieces.
- Fmax. = maximum applicable load in static conditions.

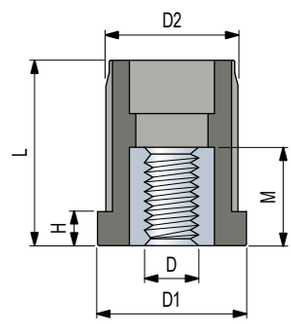

Tube dimensions B.S.I.

Outside dia. Inch	Outside dia. mm	Thickness Inch	Thickness mm	Inside dia. mm	Thread D	D_1 mm	D_2 mm	H mm	L mm	M mm	Code	Fmax. N
⧄ **2”**	50,8	0,109”	2,77	45,3	**3/4”-10**	50	45,6	10	55	30	**59241**	8000

Item code for order = Part. + Code
- Material: bushing in reinforced polyamid PA FV (black). Threaded insert in nickel plated brass.
- Packaging: 12 pieces.
- Fmax. = maximum applicable load in static conditions.

Assembly

Pressure fitted.
Interference fit.

SQUARE FLANGE BEARING

Pag. B04 - B13

OVAL FLANGE BEARING

Pag. B14 - B21

PILLOW BLOCK BEARING

Pag. B22 - B25

COMPACT PILLOW BLOCK BEARING

Pag. B26 - B27

SIDE FLANGE BEARING

Pag. B28 - B35

TAKE-UP BEARING

Pag. B36 - B37

ROUND FLANGE BEARING

Pag. B38 - B43

TECHNICAL INFORMATIONS

Technical Informations see Pag. B45 - B59

Product Quality

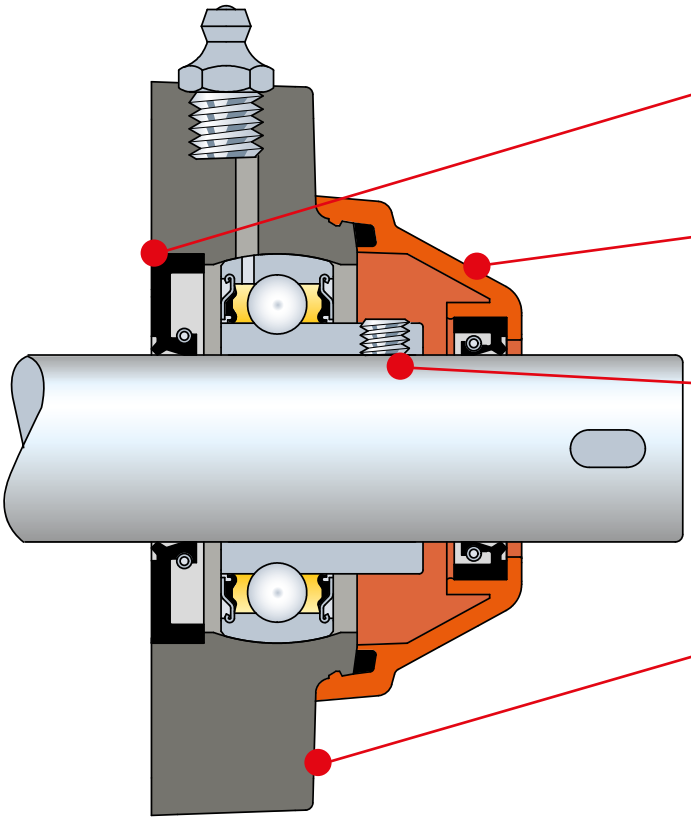

Waterproof housing

The waterproof sealing system guarantees protection of the bearing from the external environment

Inspectable bearing

The clip-on protection cover can be removed for bearing inspection

Locking by grub screws

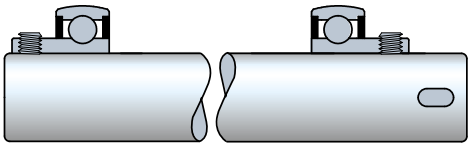

ISO dimensions

The overall dimensions can be interchanged with the corresponding cast iron type bearings

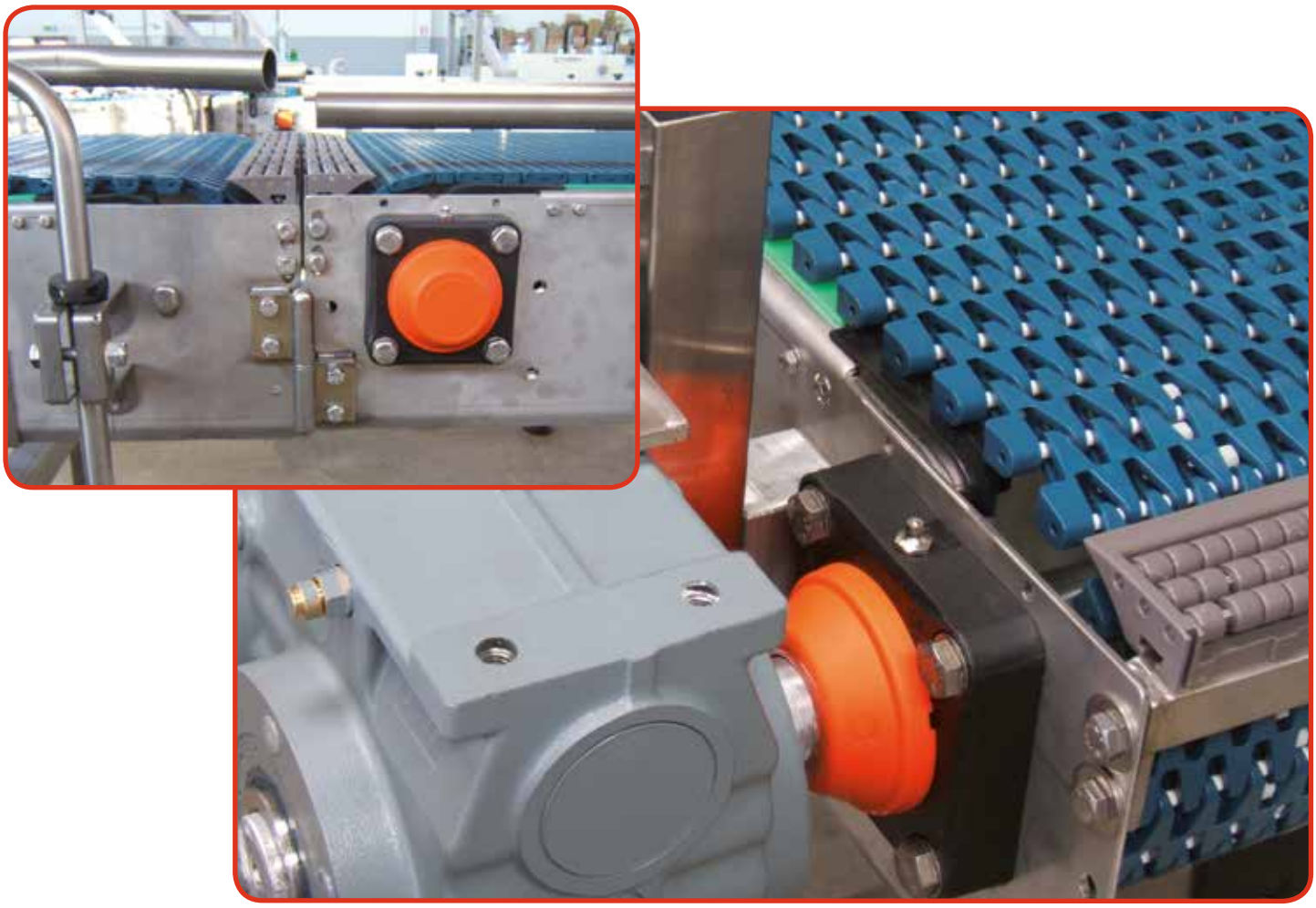

REXNORD

ISO dimensions

ISO 3228

- Overall dimensions of self-aligning bearings are in accordance with ISO 3228 standards
- All self-aligning bearings are interchangeable with their correspondent cast iron versions

Fixing bushes

- Self-aligning bearings are equipped with stainless steel AISI 304/316 bushes to reinforce mounting holes
- The reinforcing bushings avoid damages to the plastic flange during screw tightening

Thermoplastic resins

- Only best quality glass fibre reinforced polyamide PA FV/polypropylene PP FV thermoplastic resins are used for the self-aligning housings
- The resins used guarantee high resistance to oxidation and corrosion and at the same time equal the strength offered by cast iron housings. They offer a better resistance to impact
- Polyamide PA FV resins offer maximum heat and mechanical resistance
- Polypropylene PP FV resins offer maximum resistance to chemical agents

Waterproof housing

- A system of waterproof seals protects the bearing from external environment
- Protection from dust, humidity, washouts, chemical agents
- The clip-on protection cover allows inspection of the bearing

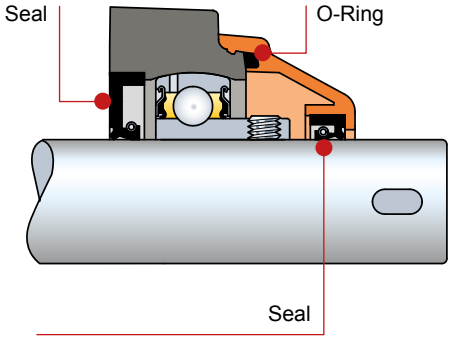

Bearing seals

- Self-aligning bearings are equipped with ball bearings featuring multipurpose sealing systems.
- **A** - **D** - Superagriseal unit. The system consists of a metallic ring fitted with a low friction rubber sealing lip
- **B** - Superagriseal unit + centrifuging ring. The system is further equipped with a metallic protection ring providing a centrifugal sealing action.
- **C steel** - Superagriseal unit + rubberised centrifuging ring. This system is used in stainless steel bearings. The upper lip of the centrifuging ring together with the grease trapped between the base seal and the ring itself guarantees maximum sealing capacity.

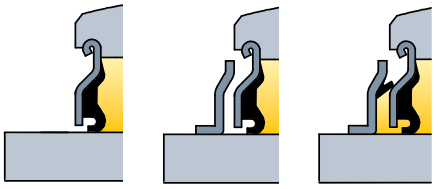

Support seals

- Waterproof self-aligning bearings feature seals for the protection against external environment
- Viton rubber seals ensure maximum resistance to chemical agents

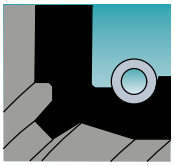

Misalignment

- All bearings are self-aligning, capable of compensating misalignments up to 2°

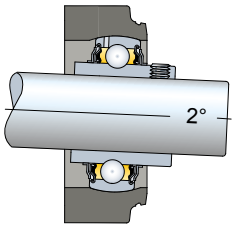

Square flange bearing units

UCF/C - SUCF/C - HCF/C - SHCF/C

Waterproof housing
Grub screws or eccentric collar shaft locking
PA FV polyamide housing
High mechanical and heat resistance. Proof to dust, humidity, washouts, steam, average aggressive chemical agents.
PP FV polypropylene housing
Proof to highly aggressive chemical agents. Inferior loading ability.
Solid flange bearings
They differ from standard flange versions for their closed surface structure, ideal for sanification.

- **Material**
  PA FV polyamide housing
  - Housing in reinforced polyamide PA FV resin (black)
  - Protection cover in polypropylene PP (orange)
  - Seal and O-Ring in NBR rubber (black)
  - Ball type nickel plated brass greasing nipple
  - Reinforcing bushings on mounting holes and washers in stainless steel AISI 304

- **Continuous operating temperature**
  in air: - 20 to + 60°C.

- **Maximum allowed misalignment:** 2°.

- **Bearing**

  - Type A (grub screws shaft locking)
  - Type D (eccentric collar shaft locking)
  - Chrome alloy steel
  - Superagriseal unit
  - Prelubricated with lithium / calcium grease
  - Can be relubricated.

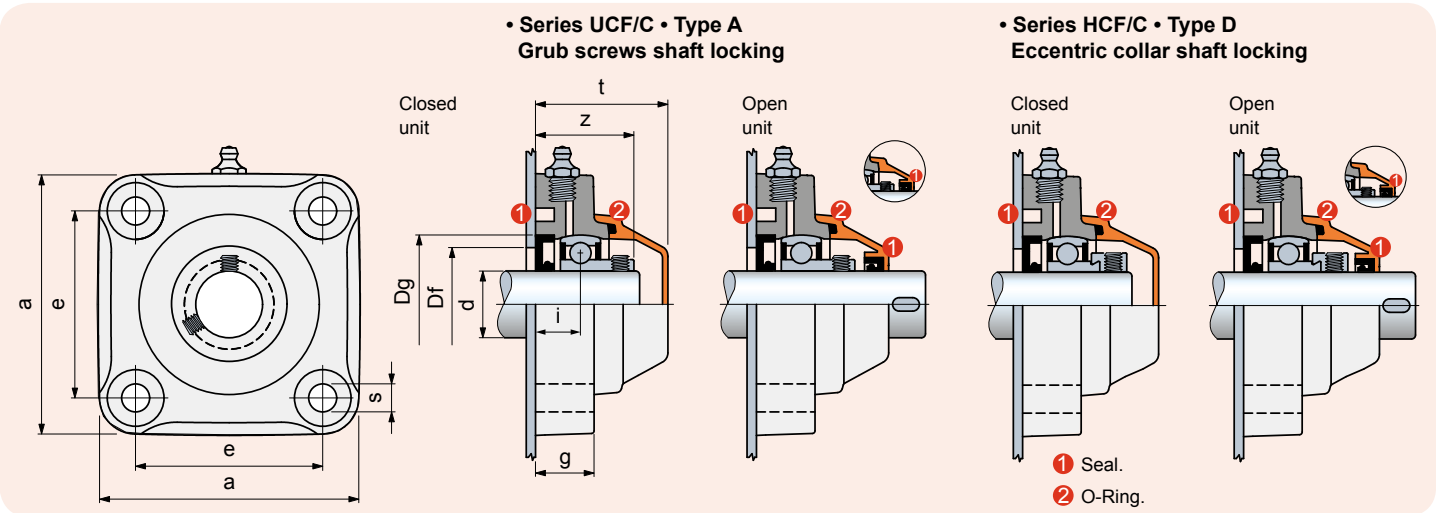

UCF/C - SUCF/C - HCF/C - SHCF/C

dia. **d** mm	Series	Housing material: **Polyamide PA FV** Standard Flange (black) Cover (orange) **Code**	Dimensions in mm e	a	s	g	i	z	t	Dg	Bore in frame[2] Df max.	min.	Bearing	Weight Kg	**Spare parts** Cover orange **Code**
Grub screws shaft locking • Closed unit															
25	UCF 205 C	**64573**	70	98	11	22,5	16,8	36,3	49,5	52	50	45	Type A	0,40	681952
30	UCF 206 C	**63112**	83	110	11	26	20	42	56	62	60	50	Type A	0,56	63154
35	UCF 207 C	**64018**	92	120	11	26	19,5	43	59	72	70	55	Type A	0,72	682022
35*	SUCF 207 C	**680522**[1]	83	110	11	26	19,5	43	61	72	70	55	Type A	0,67	63539
40	UCF 208 C	**68916**	102	131	11	30	22	47	65,5	80	78	65	Type A	0,95	63539
40*	SUCF 208 C	**61819**	83	110	11	26	19	44	66	80	78	65	Type A	0,88	600882
Grub screws shaft locking • Open unit															
25	UCF 205 C	**64623**	70	98	11	22,5	16,8	36,3	49,5	52	50	45	Type A	0,40	681972
30	UCF 206 C	**63172**	83	110	11	26	20	42	56	62	60	50	Type A	0,56	69965
35	UCF 207 C	**64028**	92	120	11	26	19,5	43	59	72	70	55	Type A	0,72	682032
35*	SUCF 207 C	**680582**[1]	83	110	11	26	19,5	43	61	72	70	55	Type A	0,67	615692
40	UCF 208 C	**68926**	102	131	11	30	22	47	65,5	80	78	65	Type A	0,95	63549
40*	SUCF 208 C	**61829**	83	110	11	26	19	44	66	80	78	65	Type A	0,88	600892
Eccentric collar shaft locking • Closed unit															
40*	SHCF 208 C	**62439**	83	110	11	26	19	51,7	66	80	78	65	Type D	1,07	600882
Eccentric collar shaft locking • Open unit															
40*	SHCF 208 C	**62449**	83	110	11	26	19	51,7	66	80	78	65	Type D	1,07	600892

*** = Version with special fixing holes.**
[1] = Solid flange.
[2] = Dimensions Df max / Df min must be respected to ensure positive retention of the seals and to allow air bleeding during lubrication.
Packaging: 4 pieces.

Square flange bearing units

UCF/CL - SUCF/CL - HCF/CL - SHCF/CL

LIFE LUBRICATED

Dry use recommended

Life lubricated
The ball-bearings are pre-lubricated with a special grease keeping the bearing for its whole life. No need for re-lubrication (see page B56 to calculate the grease life)
Grub screws or eccentric collar shaft locking
PA FV polyamide housing
High mechanical and heat resistance. Proof to dust, average aggressive chemical agents.
Solid flange bearings
They differ from standard flange versions for their closed surface structure, ideal for sanification.

- **Material**
  PA FV polyamide housing
  - Housing in reinforced polyamide PA FV resin (black)
  - Protection cover in polypropylene PP (orange)
  - Seal and O-Ring in NBR rubber (black)
  - Reinforcing bushings on mounting holes and washers in stainless steel AISI 304.

- **Continuous operating temperature**
  in air: - 20 to + 60°C.

- **Maximum allowed misalignment:** 2°.

- **Bearing**

- Type A (grub screws shaft locking)
- Chrome alloy steel
- Superagriseal unit
- Prelubricated with lithium / calcium grease, no need for re-lubrication.

• Series UCF/CL • Type A
Grub screws shaft locking

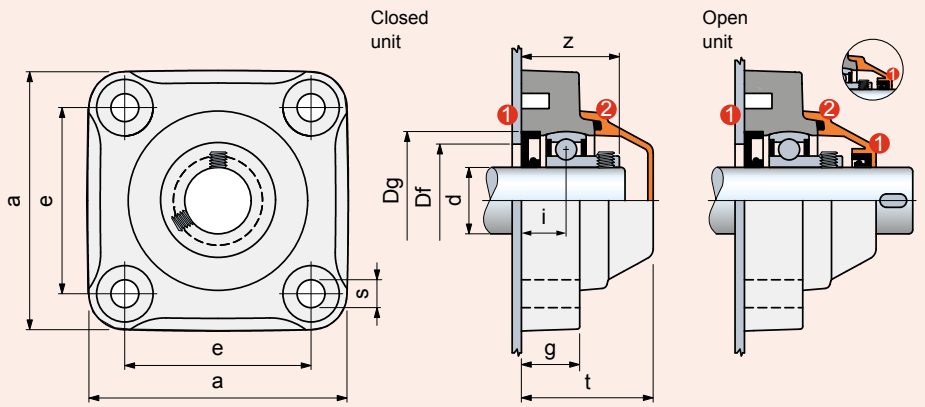

UCF/CL - SUCF/CL - HCF/CL - SHCF/CL

dia. **d** mm	Series	Housing material: **Polyamide PA FV** Standard Flange (black) Cover (orange) **Code**	Dimensions in mm: e	a	s	g	i	z	t	Dg	Bore in frame Df: max.	min.	Bearing	Weight Kg	**Spare parts** Cover orange **Code**
Grub screws shaft locking • Closed unit															
40*	SUCF 208 CL	**61819L**	83	110	11	26	19	44	66	80	78	65	Type A	0,88	600882
Grub screws shaft locking • Open unit															
40*	SUCF 208 CL	**61829L**	83	110	11	26	19	44	66	80	78	65	Type A	0,88	600892
Eccentric collar shaft locking • Closed unit															
40*	SHCF 208 CL	**62439L**	83	110	11	26	19	51,7	66	80	78	65	Type D	1,07	600882
Eccentric collar shaft locking • Open unit															
40*	SHCF 208 CL	**62449L**	83	110	11	26	19	51,7	66	80	78	65	Type D	1,07	600892

*** = Version with special fixing holes.**
Packaging: 4 pieces.

Square flange bearing units

UCF - SUCF - HCF - SHCF

Accessories

Grub screws or eccentric collar shaft locking

Version with bearing Type B

The double ring guarantees maximum protection against dust and non-corrosive substances.

Version with stainless steel bearing Type C

AISI 420 stainless steel bearing with 2 rubberised rings, provides excellent seal against humidity, steams, liquids, medium corrosive chemical agents. Maximum load ability is inferior.

Version with bearing Type A

The rubberised ring guarantees maximum protection against dusts.

Material

Polyamide PA FV guarantees maximum strength and high-temperature resistance.

Material

PA FV polyamide housing

- Housing in reinforced polyamide PA FV resin (black)
- Ball type nickel plated brass greasing nipple
- Reinforcing bushings on mounting holes and washers in stainless steel AISI 304.

Continuous operating temperature

in air: - 20 to + 60°C.

Maximum allowed misalignment: 2°.

Bearing

- Type B (grub screws shaft locking, chrome alloy steel, Superagriseal unit plus centrifuging ring)
- Type C (grub screws shaft locking, stainless steel AISI 420, Superagriseal unit plus rubberised centrifuging ring)
- Type A (grub screws shaft locking, chrome alloy steel, Superagriseal unit)
- Type D (eccentric collar shaft locking, chrome alloy steel, Superagriseal unit)
- Prelubricated with lithium / calcium grease
- Can be relubricated.

Protection covers (accessories)

Closed cover

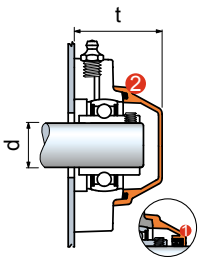

Dia 45/50 supplied without o-ring

Open cover

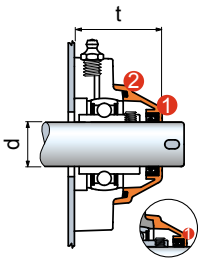

Dia 45/50 supplied without o-ring

dia. d mm	Accessories Cover orange Code	t mm
Closed cover supplied with seals		
25	**681952**	49,5
25*	**681952**	54
30	**63154**	56
35	**682022**	59
35* Standard	**63154**	54,6
40*	**600882**	66
Open cover supplied with seals		
25	**681972**	49,5
25*	**681972**	54
30	**69965**	56
35	**682032**	59
35* Solid	**615692**	61
40	**63549**	65,5

*** = Version with special fixing holes.**

1 Seals.

2 Seals O-Ring.

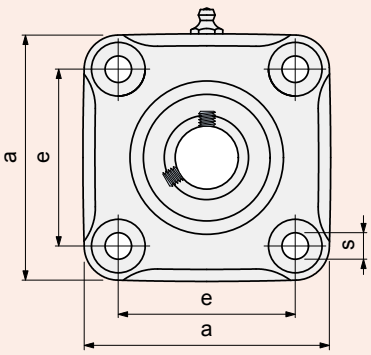

- **Series UCF • Type B Grub screws shaft locking**

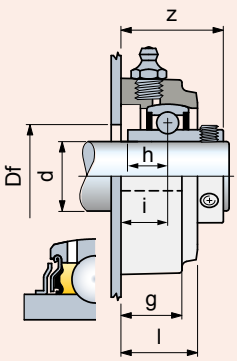

- **Series UCF • Type C Grub screws shaft locking**

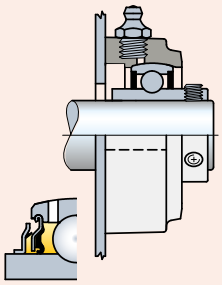

- **Series UCF • Type A Grub screws shaft locking**

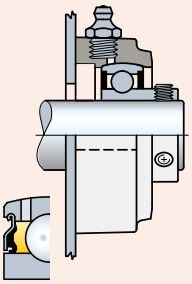

- **Series HCF • Type D Eccentric collar shaft locking**

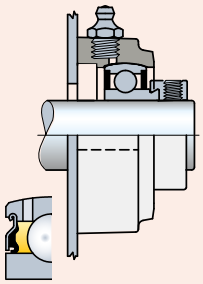

UCF - SUCF - HCF - SHCF

dia. **d** mm	Series	Housing material: **Polyamide PA FV** Standard Flange (black) **Code**	Dimensions in mm e	a	s	g	i	h	l	z	Bore in frame Df mm	Bearing	Weight Kg
Grub screws shaft locking • Version with bearing Type B													
25	UCF 205	**64533**	70	98	11	22,5	16,8	14,3	27,5	36,5	29	Type B	0,44
30	UCF 206	**60722**	83	110	11	26	20	15,9	32,5	42,2	34	Type B	0,57
35	UCF 207	**64058**	92	120	11	26	19,5	17,5	32	44,9	39	Type B	0,72
Grub screws shaft locking • Version with stainless steel bearing Type C													
25	UCF 205	**646592**	70	98	11	22,5	16,8	14,3	27,5	36,6	29	Type C	0,44
30	UCF 206	**646602**	83	110	11	26	20	15,9	32,5	42,2	34	Type C	0,57
Grub screws shaft locking • Version with bearing Type A													
25	UCF 205	**656752**	70	98	11	22,5	16,8	-	27,5	36,3	29	Type A	0,39
30	UCF 206	**666442**	83	110	11	26	20	-	32,5	42	34	Type A	0,54
35	UCF 207	**666452**	92	120	11	26	19,5	-	32	43	39	Type A	0,69
40	UCF 208	**666462**	102	131	11	30	22	-	36	47	44	Type A	0,92
40*	SUCF 208	**681552**	83	110	11	26	19	-	36	44	44	Type A	0,85
Eccentric collar shaft locking • Version with bearing Type D													
40*	SHCF 208	**62349**	83	110	11	26	19	-	36	51,7	44	Type D	1,04

Item code for order = B0000 + Code
*** = Version with special fixing holes.**
[1)] = Solid flange.
• = Solid flange 19,5.
Packaging: 4 pieces.

Square flange bearing units

UCFS/C - SUCFS/C - HCFS/C - SHCFS/C

Austenitic stainless steel surface
Waterproof housing
Grub screws or eccentric collar shaft locking
Solid flange
Closed surface structure.

Material
- Housing in reinforced polyamide PA FV resin (black)
- Austenitic stainless steel surface
- Protection cover in polypropylene PP (orange)
- Seal and O-Ring in NBR rubber (black)
- Ball type nickel plated brass greasing nipple.

Continuous operating temperature
in air: - 20 to + 60°C.

Maximum allowed misalignment: 2°.

Bearing

- Type A (grub screws shaft locking)
- Type D (eccentric collar shaft locking)
- Chrome alloy steel
- Superagriseal unit
- Prelubricated with lithium / calcium grease
- Can be relubricated.

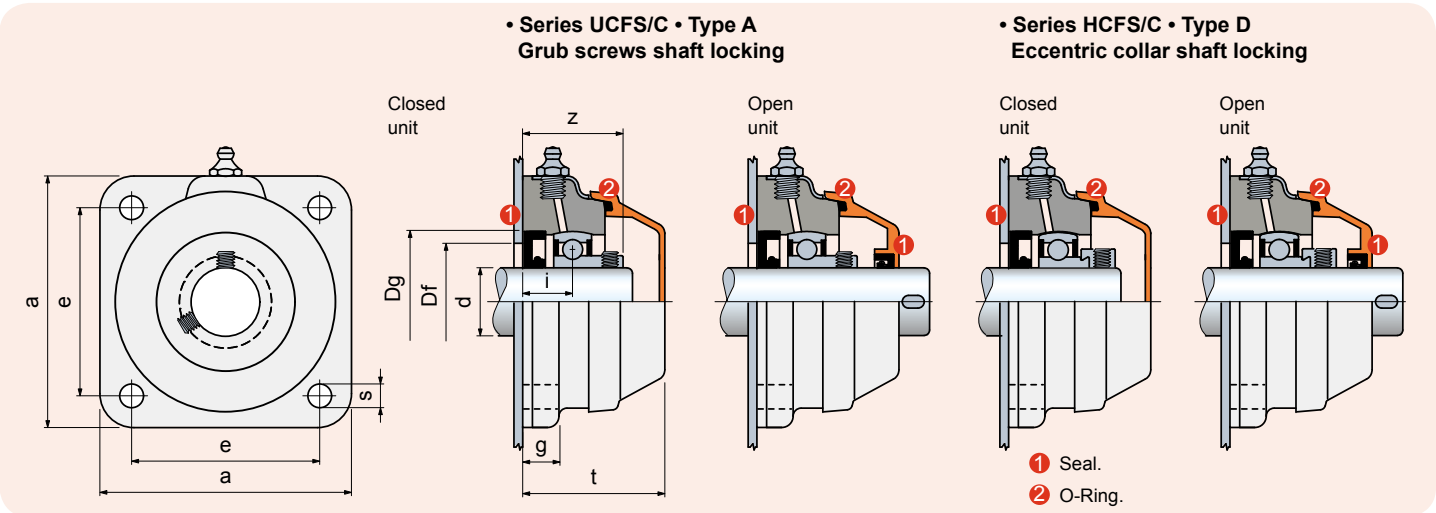

UCFS/C - SUCFS/C - HCFS/C - SHCFS/C

dia. **d** mm	Series	Housing material: **Polyamide PA FV with austenitic stainless steel surface** Solid Flange Cover (orange) **Code**	Dimensions in mm e	a	s	g	i	z	t	Dg	Bore in frame[1] Df max.	min.	Bearing	Weight Kg	**Spare parts** Cover orange **Code**
Grub screws shaft locking • Closed unit															
30	UCFS 206 C	**647613**	83	111	10,5	15,9	22	44	65,8	62	60	50	Type A	0,73	63539
35*	SUCFS 207 C	**647623**	83	111	10,5	15,9	22	45,5	65,8	72	70	55	Type A	0,84	63539
40*	SUCFS 208 C	**647633**	83	111	10,5	15,9	22	47	65,8	80	78	65	Type A	0,94	63539
Grub screws shaft locking • Open unit															
30	UCFS 206 C	**647643**	83	111	10,5	15,9	22	44	65,8	62	60	50	Type A	0,73	615682
35*	SUCFS 207 C	**647653**	83	111	10,5	15,9	22	45,5	65,8	72	70	55	Type A	0,84	615692
40*	SUCFS 208 C	**647663**	83	111	10,5	15,9	22	47	65,8	80	78	65	Type A	0,94	63549
Eccentric collar shaft locking • Closed unit															
40*	SHCFS 208 C	**647693**	83	111	10,5	15,9	19	51,7	65,8	80	78	65	Type D	1,00	63539
Eccentric collar shaft locking • Open unit															
40*	SHCFS 208 C	**647723**	83	111	10,5	15,9	19	51,7	65,8	80	78	65	Type D	1,00	63549

*** = Version with special fixing holes.**

[1] = Dimensions Df max / Df min must be respected to ensure positive retention of the seals and to allow air bleeding during lubrication.

Packaging: 4 pieces.

Square flange bearing units

F - SF

Waterproof housing
Shaft shoulders locking
High axial load capacity.
PA FV polyamide housing
High mechanical and heat resistance. Proof to dust, humidity, washouts, steam, average aggressive chemical agents.

- **Material**
  PA FV polyamide housing
  • Housing in reinforced polyamide PA FV resin (black)
  • Seal and O-Ring in NBR rubber (black)
  • Ball type nickel plated brass greasing nipple
  • Reinforcing bushings on mounting holes and washers in stainless steel AISI 304.

- **Continuous operating temperature**
  in air: - 20 to + 60°C.

- **Maximum allowed misalignment:** 2°.

- **Bearing**
  • Type 1200 self aligning ball bearing
  • Chrome alloy steel
  • Supplied without grease
  • To be prelubricated with lithium / calcium grease during first installation.

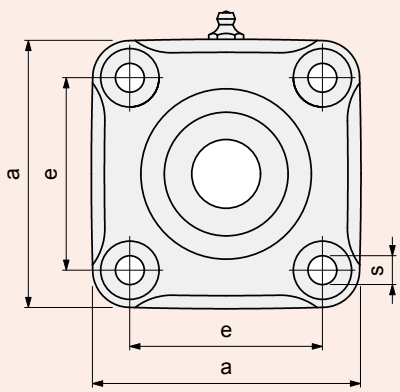

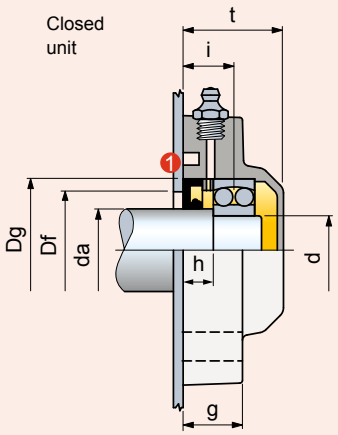

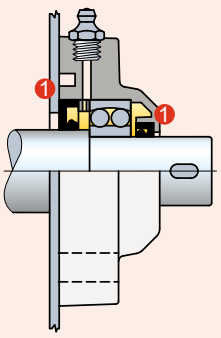

1 Seal.

Shaft dia. **da** mm	Bearing dia. **d** mm	Series	Housing material: **Polyamide PA FV** Standard Flange (black) **Code**	Dimensions in mm: e	a	s	g	i	h	t	Dg	Bore in frame[1] Df: max.	min.	Bearing	Weight Kg
Closed unit															
30	25	F 1205	**64433**	70	98	11	22,5	18,5	11	36,5	52	50	47	Type 1200	0,36
Open unit															
30	25	F 1205	**64483**	70	98	11	22,5	18,5	11	36,5	52	50	47	Type 1200	0,36

Item code for order = B0000 + Code

*** = Version with special fixing holes.**

[1] = Dimensions Df max / Df min must be respected to ensure positive retention of the seals and to allow air bleeding during lubrication.

Packaging: 6 pieces.

Oval flange bearing units

UCFLN/C - SUCFLN/C - HCFLN/C - SHCFLN/C

Waterproof housing
Grub screws or eccentric collar shaft locking
PA FV polyamide housing
High mechanical and heat resistance. Proof to dust, humidity, washouts, steam, average aggressive chemical agents.
Solid flange bearings
Closed surface structure, ideal for sanification.

- **Material**
  PA FV polyamide housing
  - Housing in reinforced polyamide PA FV resin (black)
  - Protection cover in polypropylene PP (orange)
  - Seal and O-Ring in NBR rubber (black)
  - Ball type nickel plated brass greasing nipple
  - Reinforcing bushings on mounting holes and washers in stainless steel AISI 304

- **Continuous operating temperature**
  in air: - 20 to + 60°C.

- **Maximum allowed misalignment:** 2°.

- **Bearing**

  - Type A (grub screws shaft locking)
  - Chrome alloy steel
  - Superagriseal unit
  - Prelubricated with lithium / calcium grease
  - Can be relubricated.

• Series UCFLN/C • Type A
Grub screws shaft locking

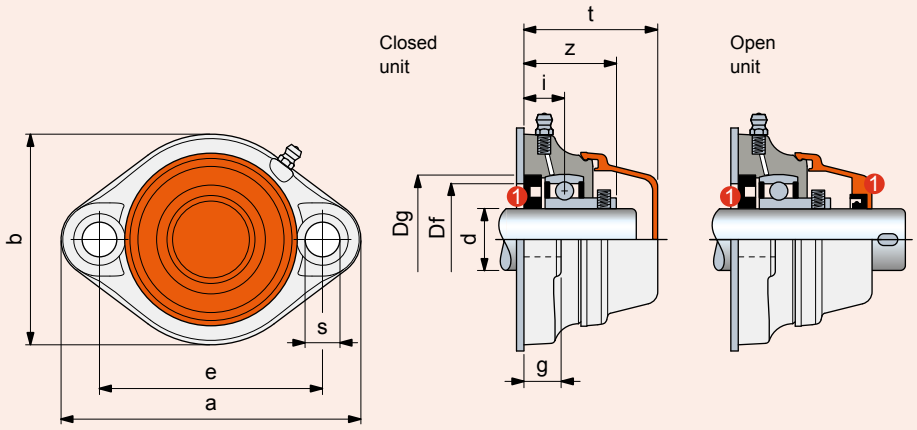

UCFLN/C - SUCFLN/C - HCFLN/C - SHCFLN/C

dia. **d** mm	Series	Housing material: **Polyamide PA FV** Solid Flange (black) Cover (orange) **Code**	Dimensions in mm: e	a	b	s	g	i	z	t	Dg	Bore in frame[1] Df: max.	min.	Bearing	Weight Kg	**Spare parts** Cover orange **Code**
Grub screws shaft locking • Closed unit																
30*	SUCFLN 206 C	**625933**	90	122	85	11	15	15	37	54	62	60	50	Type A	0,37	626203
Grub screws shaft locking • Open unit																
30*	SUCFLN 206 C	**625953**	90	122	85	11	15	15	37	54	62	60	50	Type A	0,37	626223

*** = Version with special fixing holes.**

[1] = Dimensions Df max / Df min must be respected to ensure positive retention of the seals and to allow air bleeding during lubrication.

Packaging: 4 pieces.

Oval flange bearing units

UCFLN - SUCFLN - HCFLN - SHCFLN

Accessories

Grub screws or eccentric collar shaft locking

Version with bearing Type B

The double ring guarantees maximum protection against dust and non-corrosive substances.

Version with stainless steel bearing Type C

AISI 420 stainless steel bearing with 2 rubberised rings, provides excellent seal against humidity, steams, liquids, medium corrosive chemical agents. Maximum load ability is inferior.

Version with bearing Type A

The rubberised ring guarantees maximum protection against dusts.

Material

Polyamide PA FV guarantees maximum strength and high-temperature resistance.

Material

PA FV polyamide housing

- Housing in reinforced polyamide PA FV resin (black)
- Ball type nickel plated brass greasing nipple
- Reinforcing bushings on mounting holes and washers in stainless steel AISI 304.

Continuous operating temperature

in air: - 20 to + 60°C.

Maximum allowed misalignment: 2°.

Bearing

- Type B (grub screws shaft locking, chrome alloy steel, Superagriseal unit plus centrifuging ring)
- Type C (grub screws shaft locking, stainless steel AISI 420, Superagriseal unit plus rubberised centrifuging ring)
- Type A (grub screws shaft locking, chrome alloy steel, Superagriseal unit)
- Prelubricated with lithium / calcium grease
- Can be relubricated.

Protection covers (accessories)

Closed cover

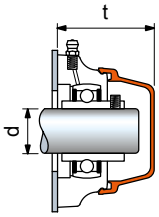

Open cover

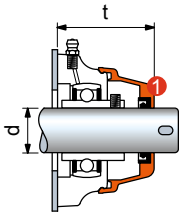

dia. d mm	Accessories Cover orange Code	t mm UCFL	t mm HCFL
Closed cover supplied			
30	**63154**	55	55
Open cover supplied with seals			
30*	**626203/626223**	54	54

*** = Version with special fixing holes.**

1 Seals.

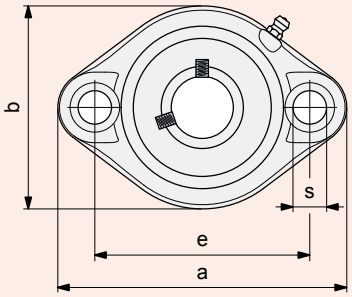

• **Series UCFLN • Type B Grub screws shaft locking**

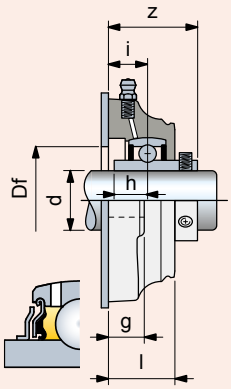

• **Series UCFLN • Type C Grub screws shaft locking**

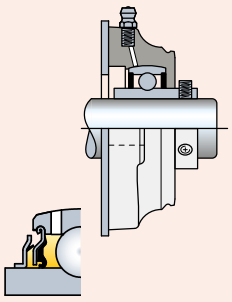

• **Series UCFLN • Type A Grub screws shaft locking**

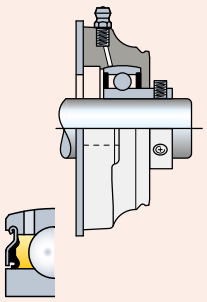

UCFLN - SUCFLN - HCFLN - SHCFLN

dia. **d** mm	Series	Housing material: **Polyamide PA FV** Solid Flange (black) **Code**	Dimensions in mm: e	a	b	s	g	i	h	l	z	Bore in frame Df mm	Bearing	Weight Kg
Grub screws shaft locking • Version with bearing Type B														
30*	SUCFLN 206	**633603**	90	122	85	11	15	15	15,9	28	37,2	45	Type B	0,29
Grub screws shaft locking • Version with stainless steel bearing Type C														
30*	SUCFLN 206	**633643**	90	122	85	11	15	15	15,9	28	37,2	45	Type C	0,29
Grub screws shaft locking • Version with bearing Type A														
30*	SUCFLN 206	**633693**	90	122	85	11	15	15	-	28	37	34	Type A	0,29

Item code for order = B0000 + Code
*** = Version with special fixing holes.**
Packaging: 4 pieces.

Oval flange bearing units

UCFL/C - SUCFL/C - HCFL/C - SHCFL/C

Waterproof housing
Grub screws or eccentric collar shaft locking
PA FV polyamide housing
High mechanical and heat resistance. Proof to dust, humidity, washouts, steam, average aggressive chemical agents.
Solid flange bearings
They differ from standard flange versions for their closed surface structure, ideal for sanification.

- **Material**
  PA FV polyamide housing
  - Housing in reinforced polyamide PA FV resin (black)
  - Protection cover in polypropylene PP (orange)
  - Seal and O-Ring in NBR rubber (black)
  - Ball type nickel plated brass greasing nipple
  - Reinforcing bushings on mounting holes and washers in stainless steel AISI 304

- **Continuous operating temperature**
  in air: - 20 to + 60°C.

- **Maximum allowed misalignment:** 2°.

- **Bearing**

  - Type A (grub screws shaft locking)
  - Type D (eccentric collar shaft locking)
  - Chrome alloy steel
  - Superagriseal unit
  - Prelubricated with lithium / calcium grease
  - Can be relubricated.

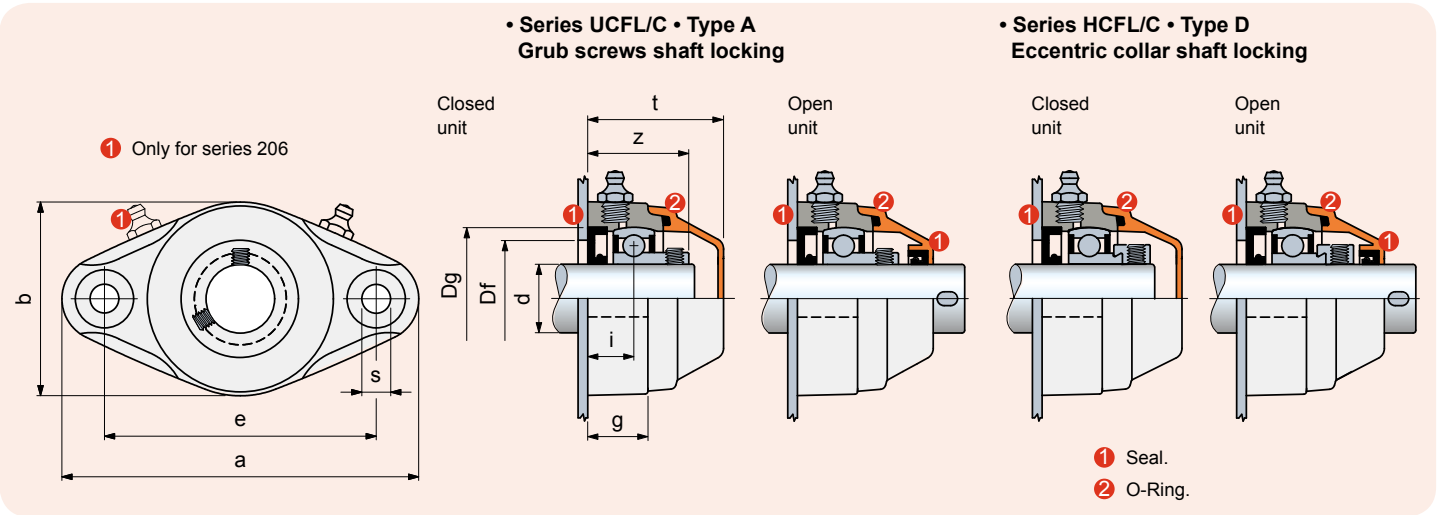

UCFL/C - SUCFL/C - HCFL/C - SHCFL/C

dia. d mm	Series	Housing material: Polyamide PA FV Standard Flange (black) Cover (orange) Code	Dimensions in mm e	a	b	s	g	i	z	t	Dg	Bore in frame[2] Df max.	min.	Bearing	Weight Kg	Spare parts Cover orange Code
Grub screws shaft locking • Closed unit																
20	UCFL 204 C	**69016**	90	116	62	11	20	15,2	33,2	46	47	45	40	Type A	0,25	681942
25	UCFL 205 C	**68523**	99	130	71	11	22,5	16,8	36,3	49,5	52	50	45	Type A	0,33	681952
30	UCFL 206 C	**68399**	117	148	85	11	26	20	42	56	62	60	50	Type A	0,42	63154
35	UCFL 207 C	**648131**	130	162	93	11	26	19,5	43	59	72	70	55	Type A	0,65	682022
40	UCFL 208 C	**672411**	144	176	102	11	30	22	47	65,5	80	78	65	Type A	0,90	63539
40*	SUCFL 208 C	**697712[1]**	117	148	112	11	26	19	44	62	80	78	65	Type A	0,74	63539
Grub screws shaft locking • Open unit																
20	UCFL 204 C	**69026**	90	116	62	11	20	15,2	33,2	46	47	45	40	Type A	0,25	681962
25	UCFL 205 C	**68533**	99	130	71	11	22,5	16,8	36,3	49,5	52	50	45	Type A	0,33	681972
30	UCFL 206 C	**68409**	117	148	85	11	26	20	42	56	62	60	50	Type A	0,42	69965
35	UCFL 207 C	**648141**	130	162	93	11	26	19,5	43	59	72	70	55	Type A	0,65	682032
40	UCFL 208 C	**672421**	144	176	102	11	30	22	47	65,5	80	78	65	Type A	0,90	63549
40*	SUCFL 208 C	**697732[1]**	117	148	112	11	26	19	44	62	80	78	65	Type A	0,74	63549
Eccentric collar shaft locking • Closed unit																
40*	SHCFL 208 C	**697752[1]**	117	148	112	11	26	19	51,7	68	80	78	65	Type D	0,93	600882
Eccentric collar shaft locking • Open unit																
40*	SHCFL 208 C	**697772**	117	148	112	11	26	19	51,7	68	80	78	65	Type D	0,93	600892

*** = Version with special fixing holes.**
SUCFL206C/SHCFL206C: Assembly with cylindrical head screws.
[1] = Solid flange.
[2] = Dimensions Df max / Df min must be respected to ensure positive retention of the seals and to allow air bleeding during lubrication.
Packaging: 4 pieces.

Oval flange bearing units

UCFL - SUCFL - HCFL - SHCFL

Accessories

Grub screws or eccentric collar shaft locking

Version with bearing Type B

The double ring guarantees maximum protection against dust and non-corrosive substances.

Version with stainless steel bearing Type C

AISI 420 stainless steel bearing with 2 rubberised rings, provides excellent seal against humidity, steams, liquids, medium corrosive chemical agents. Maximum load ability is inferior.

Version with bearing Type A

The rubberised ring guarantees maximum protection against dusts.

Material

Polyamide PA FV guarantees maximum strength and high-temperature resistance.

Material

PA FV polyamide housing

- Housing in reinforced polyamide PA FV resin (black)
- Ball type nickel plated brass greasing nipple
- Reinforcing bushings on mounting holes and washers in stainless steel AISI 304.

Continuous operating temperature

in air: - 20 to + 60°C.

Maximum allowed misalignment: 2°.

Bearing

- Type B (grub screws shaft locking, chrome alloy steel, Superagriseal unit plus centrifuging ring)
- Type C (grub screws shaft locking, stainless steel AISI 420, Superagriseal unit plus rubberised centrifuging ring)
- Type A (grub screws shaft locking, chrome alloy steel, Superagriseal unit)
- Type D (eccentric collar shaft locking, chrome alloy steel, Superagriseal unit)
- Prelubricated with lithium / calcium grease
- Can be relubricated.

Protection covers (accessories)

Closed cover

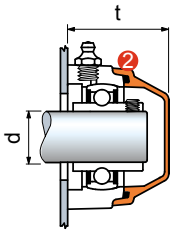

Open cover

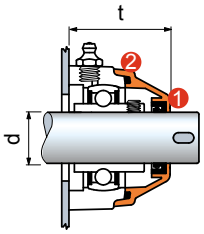

1 Seals.

2 Seals O-Ring.

dia. d mm	Accessories Cover orange Code	t mm UCFL	t mm HCFL
Closed cover supplied with seals			
17*	**681942**	46	49
20	**681942**	46	49
25	**681952**	49,5	49,5
25*	**681952**	49,5	49,5
30	**63154**	55	55
30*	**63154**	55	55
35	**682022**	59	59
40[2)]	**600882**	-	71
Open cover supplied with seals			
17*	**696162**	46	49
25	**681972**	49,5	49,5
25*	**681972**	49,5	49,5
30	**69965**	55	55
30*	**69965**	55	55
35	**682032**	59	59
35*	**615692**	62	62
40[1)]	**63549**	65,5	-

*** = Version with special fixing holes.**

[1)] = Protection cover for bearing unit with grub screws shaft locking.

[2)] = Protection cover for bearing unit with eccentric collar shaft locking.

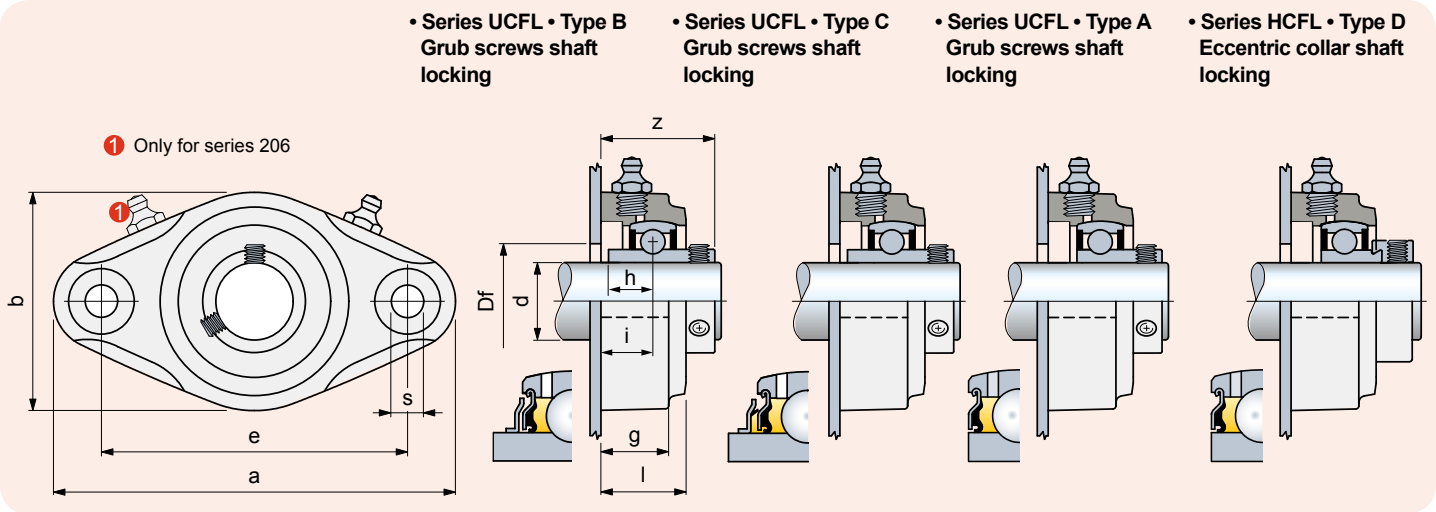

UCFL - SUCFL - HCFL - SHCFL

dia. **d** mm	Series	Housing material: **Polyamide PA FV** Standard Flange (black) **Code**	Dimensions in mm e	a	b	s	g	i	h	l	z	Bore in frame Df mm	Bearing	Weight Kg
Grub screws shaft locking • Version with bearing Type B														
20	UCFL 204	**69056**	90	116	62	11	20	15,2	12,7	25	33,5	24	Type B	0,25
25	UCFL 205	**68563**	99	130	71	11	22,5	16,8	14,3	27,5	36,5	29	Type B	0,31
30	UCFL 206	**68439**	117	148	85	11	26	19	15,9	32,5	42,2	34	Type B	0,44
Grub screws shaft locking • Version with stainless steel bearing Type C														
20	UCFL 204	**646542**	90	116	62	11	20	15,2	12,7	25	33,5	24	Type C	0,25
25	UCFL 205	**646552**	99	130	71	11	22,5	16,8	14,3	27,5	36,6	29	Type C	0,31
30	UCFL 206	**646562**	117	148	85	11	26	19	15,9	32,5	42,2	34	Type C	0,44
Grub screws shaft locking • Version with bearing Type A														
20	UCFL 204	**655482**	90	116	62	11	20	15,2	-	25	33,2	24	Type A	0,23
25	UCFL 205	**655472**	99	130	71	11	22,5	16,8	-	27,5	36,3	29	Type A	0,31
30	UCFL 206	**666412**	117	148	85	11	26	20	-	32,5	42	34	Type A	0,39
40*	SUCFL 208	**602193**[1)]	117	148	112	11	26	19	-	33	44	44	Type A	0,91
Eccentric collar shaft locking • Version with bearing Type D														
40*	SHCFL 208	**602213**[1)]	117	148	112	11	26	19	-	33	51,7	44	Type D	0,91

*** = Version with special fixing holes.**
SUCFL/SHCFL: Assembly with cylindrical head screws.
[1)] = Solid flange.
Packaging: 4 pieces.

Pillow block type bearing units

UCP/C - HCP/C

Waterproof housing
Grub screws or eccentric collar shaft locking
PA FV polyamide housing
High mechanical and heat resistance. Proof to dust, humidity, washouts, steam, average aggressive chemical agents.
PP FV polypropylene housing
Proof to highly aggressive chemical agents. Inferior loading ability.

Material
PA FV polyamide housing
- Housing in reinforced polyamide PA FV resin (black)
- Protection cover in polypropylene PP (orange)
- Seal and O-Ring in NBR rubber (black)
- Ball type nickel plated brass greasing nipple
- Reinforcing bushings on mounting holes and washers in stainless steel AISI 304
- Stainless steel AISI 303 safety ring.

Continuous operating temperature
in air: - 20 to + 60°C.

Maximum allowed misalignment: 2°.

Bearing

- Type A (grub screws shaft locking)
- Type D (eccentric collar shaft locking)
- Chrome alloy steel
- Superagriseal unit
- Prelubricated with lithium / calcium grease
- Can be relubricated.

• Series UCP/C • Type A
Grub screws shaft locking

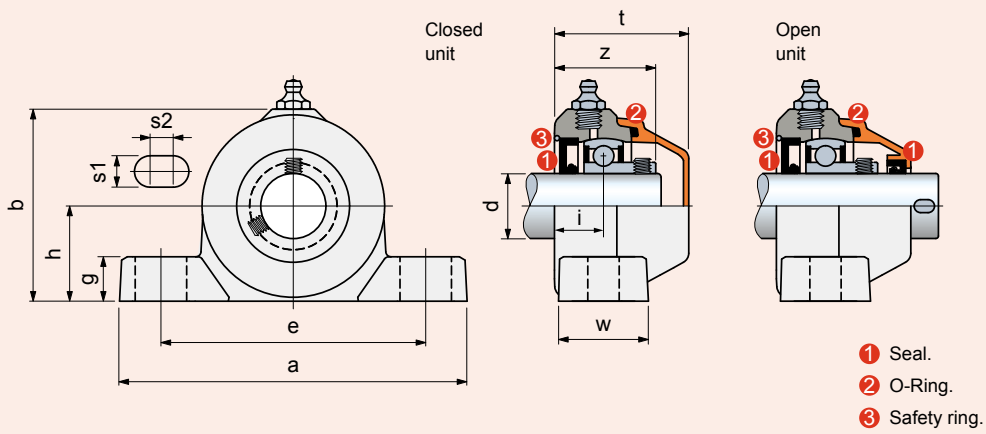

dia. **d** mm	Series	Housing material: **Polyamide PA FV** Flange (black) Cover (orange) **Code**	Dimensions in mm e	a	h	b	s1	s2	g	w	i	z	t	Bearing	Weight Kg	**Spare parts** Cover orange **Code**
Grub screws shaft locking • Closed unit																
20	UCP 204 C	**682941**	96	128	33,3	67	12	10	17	30	18,9	36,9	49,7	Type A	0,27	681942
25	UCP 205 C	**646511**	106	140	36,5	75	12	10	17	34,5	18,8	38,3	51,5	Type A	0,33	681952
Grub screws shaft locking • Open unit																
20	UCP 204 C	**682931**	96	128	33,3	67	12	10	17	30	18,9	36,9	49,7	Type A	0,27	681962
25	UCP 205 C	**646521**	106	140	36,5	75	12	10	17	34,5	18,8	38,3	51,5	Type A	0,33	681972

Packaging: 4 pieces.

Pillow block type bearing units

UCP - HCP

Grub screws or eccentric collar shaft locking
Version with bearing Type B
The double ring guarantees maximum protection against dust and non-corrosive substances.
Version with stainless steel bearing Type C
AISI 420 stainless steel bearing with 2 rubberised rings, provides excellent seal against humidity, steams, liquids, medium corrosive chemical agents. Maximum load ability is inferior.
Version with bearing Type A
The rubberised ring guarantees maximum protection against dusts.
Material
Polyamide PA FV guarantees maximum strength and high-temperature resistance.

Material
PA FV polyamide housing
- Housing in reinforced polyamide PA FV resin (black)
- Ball type nickel plated brass greasing nipple
- Reinforcing bushings on mounting holes and washers in stainless steel AISI 304.

Continuous operating temperature
in air: - 20 to + 60°C.

Maximum allowed misalignment: 2°.

Bearing
- Type B (grub screws shaft locking, chrome alloy steel, Superagriseal unit plus centrifuging ring)
- Type C (grub screws shaft locking, stainless steel AISI 420, Superagriseal unit plus rubberised centrifuging ring)
- Type A (grub screws shaft locking, chrome alloy steel, Superagriseal unit)
- Type D (eccentric collar shaft locking, chrome alloy steel, Superagriseal unit)
- Prelubricated with lithium / calcium grease
- Can be relubricated.

Protection covers (accessories)

Closed cover

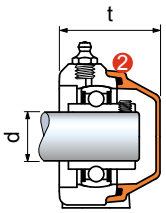

Open cover

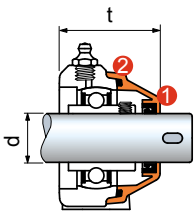

dia. d mm	Accessories Cover orange Code	t mm UCFL	t mm HCFL
Closed cover supplied with seals			
20	**681942**	49,7	52
25	**681952**	51,5	51,5
30	**63154**	55	55
35	**682022**	61	61
40[2]	**600882**	-	72
Open cover supplied with seals			
25	**681972**	51,5	51,5
30	**69965**	55	55
35	**682032**	61	61
40[1]	**63549**	66,5	-

1 Seals.
2 Seals O-Ring.

[1] = Protection cover for bearing unit with grub screws shaft locking.
[2] = Protection cover for bearing unit with eccentric collar shaft locking.

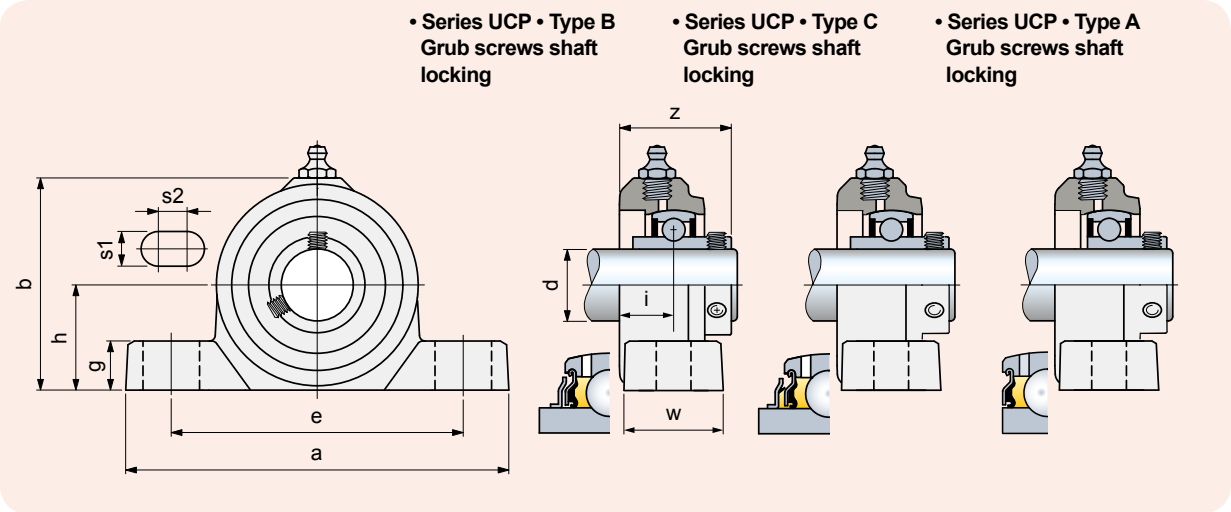

dia. **d** mm	Series	Housing material: **Polyamide PA FV** Flange (black) **Code**	Dimensions in mm e	a	h	b	s1	s2	g	w	i	z	Bearing	Weight Kg
Grub screws shaft locking • Version with bearing Type B														
25	UCP 205	**648781**	106	140	36,5	75	12	10	17	34,5	18,8	38,5	Type B	0,33
Grub screws shaft locking • Version with stainless steel bearing Type C														
25	UCP 205	**646502**	106	140	36,5	75	12	10	17	34,5	18,8	38,6	Type C	0,33
Grub screws shaft locking • Version with bearing Type A														
25	UCP 205	**678562**	106	140	36,5	75	12	10	17	34,5	18,8	38,3	Type A	0,30

Packaging: 4 pieces.

Compact pillow block

UCPA/C - HCPA/C

Waterproof housing
Grub screws or eccentric collar shaft locking
PA FV polyamide housing
High mechanical and heat resistance. Proof to dust, humidity, washouts, steam, average aggressive chemical agents.

- **Material**
  PA FV polyamide housing
  - Housing in reinforced polyamide PA FV resin (black)
  - Protection cover in polypropylene PP (orange)
  - Seal and O-Ring in NBR rubber (black)
  - Ball type nickel plated brass greasing nipple
  - Nickel plated brass threaded bushings.

- **Continuous operating temperature**
  in air: - 20 to + 60°C.

- **Maximum allowed misalignment:** 2°.

- **Bearing**

- Type A (grub screws shaft locking)
- Chrome alloy steel
- Superagriseal unit
- Prelubricated with lithium / calcium grease
- Can be relubricated.

• Series UCPA/C • Type A
Grub screws shaft locking

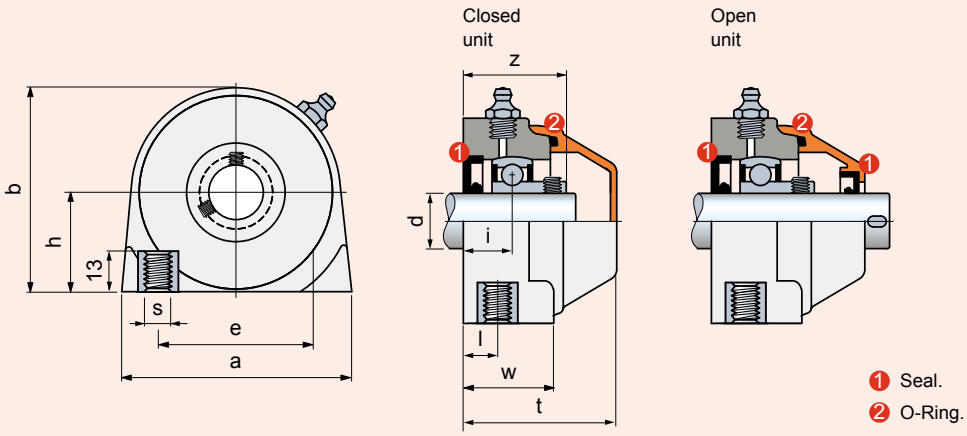

1 Seal.
2 O-Ring.

UCPA/C - HCPA/C

dia. **d** mm	Series	Housing material: **Polyamide PA FV** Flange (black) Cover (orange) **Code**	e	a	h	b	s	w	i	l	z	t	Bearing	Weight Kg	**Spare parts** Cover orange **Code**
			Dimensions in mm												
Grub screws shaft locking • Closed unit															
25	UCPA 205 C	**696202**	50,8	75	36,5	72	M10	30	16,8	12	36,3	52	Type A	0,29	681952
Grub screws shaft locking • Open unit															
25	UCPA 205 C	**696232**	50,8	75	36,5	72	M10	30	16,8	12	36,3	52	Type A	0,29	681972

Packaging: 4 pieces.

Side flange bearing units

UCFB/C - HCFB/C

The picture shows d. 20 - 25 version.

For other versions please see the technical drawing.

Waterproof housing
Grub screws or eccentric collar shaft locking
PA FV polyamide housing
High mechanical and heat resistance. Proof to dust, humidity, washouts, steam, average aggressive chemical agents.
Solid flange bearings
They differ from standard flange versions for their closed surface structure, ideal for sanification.

- **Material**
  PA FV polyamide housing
  - Housing in reinforced polyamide PA FV resin (black)
  - Protection cover in polypropylene PP (orange)
  - Seal and O-Ring in NBR rubber (black)
  - Ball type nickel plated brass greasing nipple
  - Reinforcing bushings on mounting holes and washers in stainless steel AISI 304

- **Continuous operating temperature**
  in air: - 20 to + 60°C.

- **Maximum allowed misalignment:** 2°.

- **Bearing**

  - Type A (grub screws shaft locking)
  - Chrome alloy steel
  - Superagriseal unit
  - Prelubricated with lithium / calcium grease
  - Can be relubricated.

• Series UCFB/C • Type A
Grub screws shaft locking

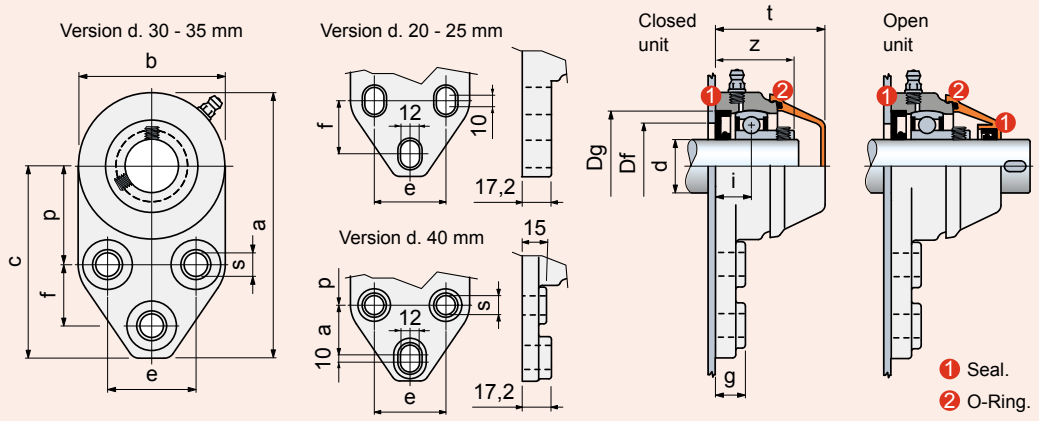

UCFB/C - HCFB/C

dia. d mm	Series	Housing material: Polyamide PA FV Standard Flange (black) Cover (orange) Code	a	b	c	p	e	f	s	g	i	z	t	Dg	Bore in frame[1] Df max.	Bore in frame[1] Df min.	Bearing	Weight Kg	Spare parts Cover orange Code
Grub screws shaft locking • Closed unit																			
25	UCFB 205 C	**656542N**	124,2	68,8	89,8	46	41,3	28,6	11	17,2	17,8	37,3	52	52	50	45	Type A	0,32	681952
30	UCFB 206 C	**656562**	138,6	81,3	97,9	52,4	47,6	31,7	11	14	20	42	55	62	60	50	Type A	0,47	63154
Grub screws shaft locking • Open unit																			
25	UCFB 205 C	**656552N**	124,2	68,8	89,8	46	41,3	28,6	11	17,2	17,8	37,3	52	52	50	45	Type A	0,32	681972
30	UCFB 206 C	**656572**	138,6	81,3	97,9	52,4	47,6	31,7	11	14	20	42	55	62	60	50	Type A	0,47	69965

[1] = Dimensions Df max / Df min must be respected to ensure positive retention of the seals and to allow air bleeding during lubrication.
Packaging: 4 pieces.

Side flange bearing units

UCFB - HCFB

The picture shows d. 20 - 25 version.

For other versions please see the technical drawing.

Accessories

Grub screws or eccentric collar shaft locking

Version with bearing Type B

The double ring guarantees maximum protection against dust and non-corrosive substances.

Version with stainless steel bearing Type C

AISI 420 stainless steel bearing with 2 rubberised rings, provides excellent seal against humidity, steams, liquids, medium corrosive chemical agents. Maximum load ability is inferior.

Version with bearing Type A

The rubberised ring guarantees maximum protection against dusts.

Material

Polyamide PA FV guarantees maximum strength and high-temperature resistance.

- **Material**
  PA FV polyamide housing
  - Housing in reinforced polyamide PA FV resin (black)
  - Ball type nickel plated brass greasing nipple
  - Reinforcing bushings on mounting holes in stainless steel AISI 304.
- **Continuous operating temperature**
  in air: - 20 to + 60°C.
- **Maximum allowed misalignment:** 2°.
- **Bearing**
  - Type B (grub screws shaft locking, chrome alloy steel, Superagriseal unit plus centrifuging ring)
  - Type C (grub screws shaft locking, stainless steel AISI 420, Superagriseal unit plus rubberised centrifuging ring)
  - Type A (grub screws shaft locking, chrome alloy steel, Superagriseal unit)
  - Prelubricated with lithium / calcium grease
  - Can be relubricated.

- **Protection covers (accessories)**

Closed cover

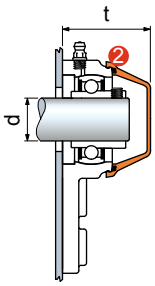

Open cover

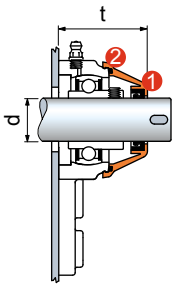

1 Seals.
2 Seals O-Ring.

dia. **d** mm	**Accessories** Cover orange **Code**	t mm UCFL	t mm HCFL
Closed cover supplied with seals			
20	**681942**	49	49
25	**681952**	52	57
30	**63154**	55	60
35	**682022**	59	64,5
40	**600882**	72	72
Open cover supplied with seals			
25	**681972**	52	57
30	**69965**	55	60
35	**682032**	59	64,5

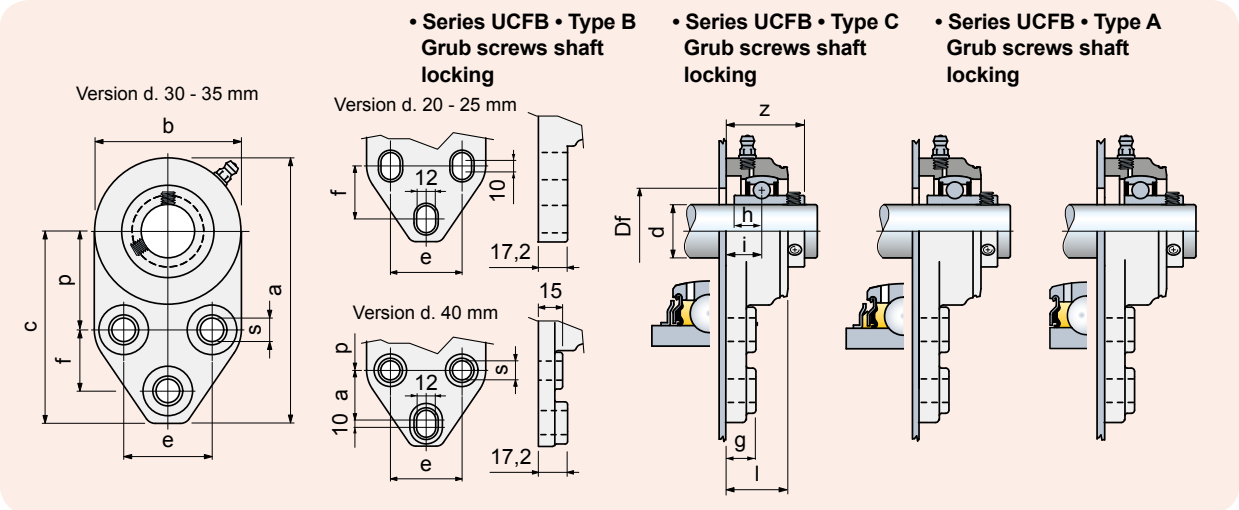

UCFB - HCFB

dia. d mm	Series	Housing material: Polyamide PA FV Solid Flange (black) Code	a	b	c	p	e	f	s	g	i	h	l	z	Bore in frame Df mm	Bearing	Weight Kg
			Dimensions in mm														
Grub screws shaft locking • Version with bearing Type B																	
25	UCFB 205	**663912N**	124,2	68,8	89,8	46	41,3	28,6	11	17,2	17,8	14,3	29	37,5	29	Type B	0,33
30	UCFB 206	**663922**	138,6	81,3	97,9	52,4	47,6	31,7	11	14	20	15,9	31,5	42,2	34	Type B	0,50
Grub screws shaft locking • Version with stainless steel bearing Type C																	
25	UCFB 205	**663942N**	124,2	68,8	89,8	46	41,3	28,6	11	17,2	17,8	14,3	29	37,6	29	Type C	0,33
30	UCFB 206	**663952**	138,6	81,3	97,9	52,4	47,6	31,7	11	14	20	15,9	31,5	42,2	34	Type C	0,50
Grub screws shaft locking • Version with bearing Type A																	
25	UCFB 205	**663672N**	124,2	68,8	89,8	46	41,3	28,6	11	17,2	17,8	-	29	37,3	29	Type A	0,30
30	UCFB 206	**663682**	138,6	81,3	97,9	52,4	47,6	31,7	11	14	20	-	31,5	42	34	Type A	0,45

Packaging: 4 pieces.

Side flange bearing units

SQL/C

Grub screws shaft locking
PP FV polypropylene housing
Proof to highly aggressive chemical agents.
Inferior loading ability.
Solid flange bearings
Closed surface structure, ideal for sanification.

NEW

- **Material**
  PP FV polypropylene housing
  - Housing in reinforced polypropylene PP FV resin (black)
  - Protection cover in polypropylene PP (orange)
  - Seal and O-Ring in NBR rubber (black)
  - Ball type stainless steel AISI 316 greasing nipple
  - Washers in stainless steel AISI 304.

- **Continuous operating temperature**
  in air: - 20 to + 60°C.

- **Maximum allowed misalignment:** 2°.

- **Bearing**

- Grub screws shaft locking
- Chrome alloy steel
- Superagriseal unit
- Prelubricated with lithium / calcium grease
- Can be relubricated.

• Series SQL/C • Type A
Grub screws shaft locking

Closed unit Right

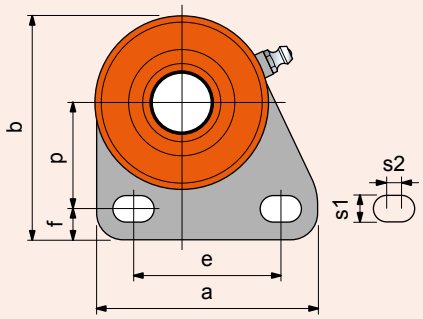

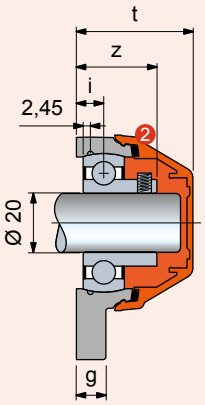

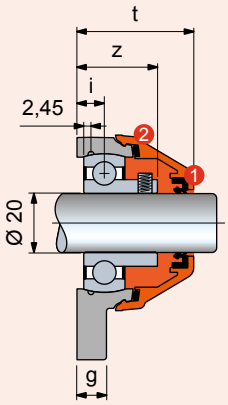

Open unit Left

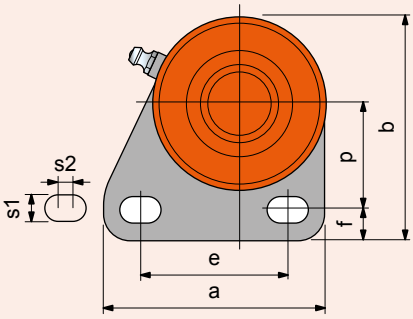

1 Seal.
2 O-Ring.

dia. **d** mm	Series	Housing material **Polypropylene PP FV** Solid Flange (black) Cover (orange) **Code**	e	a	b	s1	s2	g	i	z	t	f	p	Bearing	Weight Kg	**Spare parts** Cover orange **Code**
			Dimensions in mm													
Closed unit Left																
20	SQL 204 C	**656263**	50	75	76	9	5	10	9,3	27,3	39,5	10,5	36	Type A	0,20	681942
Open unit Left																
20	SQL 204 C	**656273**	50	75	76	9	5	10	9,3	27,3	39,5	10,5	36	Type A	0,20	681962
Closed unit Right																
20	SQL 204 C	**656283**	50	75	76	9	5	10	9,3	27,3	39,5	10,5	36	Type A	0,20	681942
Open unit Right																
20	SQL 204 C	**656293**	50	75	76	9	5	10	9,3	27,3	39,5	10,5	36	Type A	0,20	681962

Packaging: 4 pieces.

Side flange bearing units

SQL

Grub screws shaft locking
PP FV polypropylene housing
Proof to highly aggressive chemical agents.
Inferior loading ability.
Solid flange bearings
Closed surface structure, ideal for sanification.

NEW

Accessories

- **Material**
  PP FV polypropylene housing
  - Housing in reinforced polypropylene PP FV resin (black)
  - Ball type stainless steel AISI 316 greasing nipple
  - Washers in stainless steel AISI 304.

- **Continuous operating temperature**
  in air: - 20 to + 60°C.

- **Maximum allowed misalignment:** 2°.

- **Bearing**

- Grub screws shaft locking
- Chrome alloy steel
- Superagriseal unit
- Prelubricated with lithium / calcium grease
- Can be relubricated.

• Series SQL • Type A
Grub screws shaft locking

Right unit

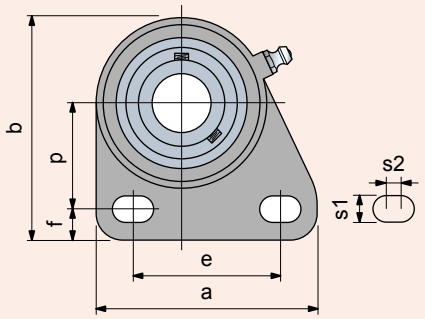

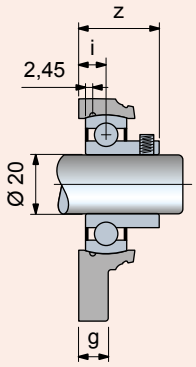

Left unit

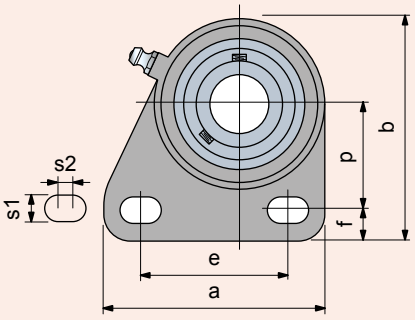

dia. **d** mm	Series	Housing material **Polypropylene PP FV** Solid Flange (black) **Code**	Dimensions in mm e	a	b	s1	s2	g	i	z	f	p	Bearing	Weight Kg
Left unit														
20	SQL 204	**656303**	50	75	76	9	5	10	9,3	27,3	10,5	36	Type A	0,18
Right unit														
20	SQL 204	**656313**	50	75	76	9	5	10	9,3	27,3	10,5	36	Type A	0,18

Packaging: 6 pieces.

Take-up bearing units

UCT/C - HCT/C

Waterproof housing
Grub screws or eccentric collar shaft locking
PA FV polyamide housing
High mechanical and heat resistance. Proof to dust, humidity, washouts, steam, average aggressive chemical agents.

Material
PA FV polyamide housing
- Housing in reinforced polyamide PA FV resin (black)
- Protection cover in polypropylene PP (orange)
- Seal and O-Ring in NBR rubber (black)
- Ball type nickel plated brass greasing nipple
- Threaded insert in nickel plated brass.

Continuous operating temperature
in air: - 20 to + 60°C.

Maximum allowed misalignment: 2°.

Bearing

- Type A (grub screws shaft locking)
- Chrome alloy steel
- Superagriseal unit
- Prelubricated with lithium / calcium grease
- Can be relubricated.

Assembly

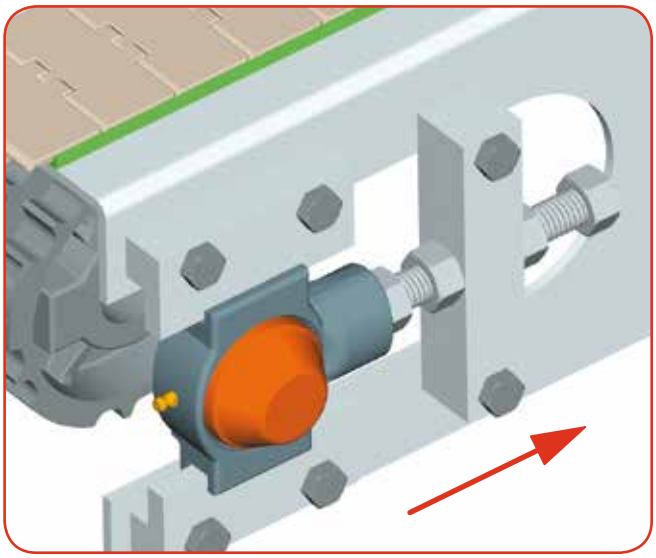

Working load allowed only in this direction.

• Series UCT/C • Type A
Grub screws shaft locking

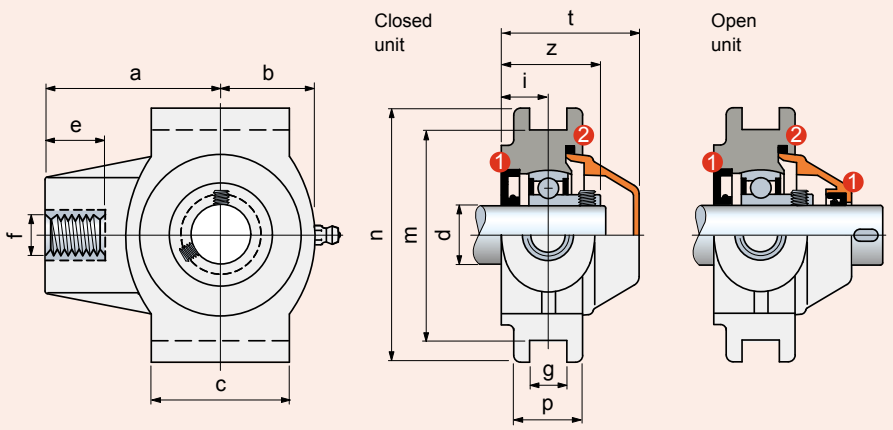

Seal.
O-Ring.

dia. **d** mm	Series	Housing material: **Polyamide PA FV** Flange (black) Cover (orange) **Code**	Dimensions in mm a	b	c	e	f	g	i	m	n	p	z	t	Bearing	Weight Kg	**Spare parts** Cover orange **Code**
Grub screws shaft locking • Closed unit																	
25	UCT 205 C	**666962**	68,5	39,5	50	28	M20	13,5	17	76,2	92	25	36,5	52	Type A	0,39	681872
Grub screws shaft locking • Open unit																	
25	UCT 205 C	**666992**	68,5	39,5	50	28	M20	13,5	17	76,2	92	25	36,5	52	Type A	0,39	681892

Packaging: 4 pieces.

Round flange bearing units

UCFC/C

Waterproof housing
Grub screws shaft locking
PA FV polyamide housing
High mechanical and heat resistance. Proof to dust, humidity, washouts, steam, average aggressive chemical agents.

Material
PA FV polyamide housing
- Housing in reinforced polyamide PA FV resin (black)
- Protection cover in polypropylene PP (orange)
- Seal and O-Ring in NBR rubber (black)
- Ball type nickel plated brass greasing nipple
- Reinforcing bushings on mounting holes and washers in stainless steel AISI 304

Continuous operating temperature
in air: - 20 to + 60°C.

Maximum allowed misalignment: 2°.

Bearing

- Type A (grub screws shaft locking)
- Chrome alloy steel
- Superagriseal unit
- Prelubricated with lithium / calcium grease
- Can be relubricated.

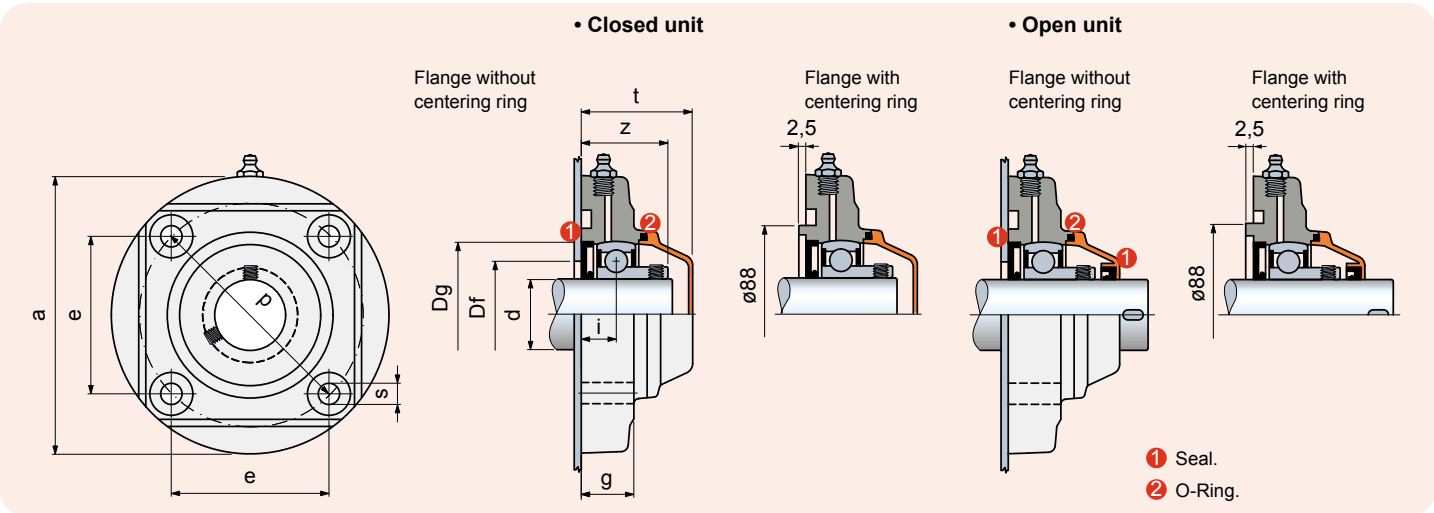

dia. d mm	Flange	Series	Housing material: Polyamide PA FV, Standard Flange (black), Cover (orange) Code	Dimensions in mm e	a	p	s	g	i	z	t	Dg	Bore in frame[1] Df max.	min.	Bearing	Weight Kg	Spare parts Cover orange Code
Closed unit																	
35	Without centering ring	UCFC 207 C	**683921**	77,8	137	110	11	26	17,3	40,8	55	72	70	55	Type A	0,75	603772
	With centering ring	UCFC 207 C	**624772**	77,8	137	110	11	26	17,3	40,8	55	72	-	-	Type A	0,75	603772
Open unit																	
35	Without centering ring	UCFC 207 C	**683931**	77,8	137	110	11	26	17,3	40,8	55	72	70	55	Type A	0,75	603792
	With centering ring	UCFC 207 C	**624782**	77,8	137	110	11	26	17,3	40,8	55	72	-	-	Type A	0,75	603792

[1] = Dimensions Df max / Df min must be respected to ensure positive retention of the seals and to allow air bleeding during lubrication.
Packaging: 4 pieces.

Round flange bearing units

UCFC

Grub screws shaft locking

Version with bearing Type B

The double ring guarantees maximum protection against dust and non-corrosive substances.

Version with stainless steel bearing Type C

AISI 420 stainless steel bearing with 2 rubberised rings, provides excellent seal against humidity, steams, liquids, medium corrosive chemical agents. Maximum load ability is inferior.

Version with bearing Type A

The rubberised ring guarantees maximum protection against dusts.

Material

Polyamide PA FV guarantees maximum strength and high-temperature resistance.

- **Material**
  PA FV polyamide housing
  - Housing in reinforced polyamide PA FV resin (black)
  - Ball type nickel plated brass greasing nipple
  - Reinforcing bushings on mounting holes and washers in stainless steel AISI 304.

- **Continuous operating temperature**
  in air: - 20 to + 60°C.

- **Maximum allowed misalignment:** 2°.

- **Bearing**
  - Type B (grub screws shaft locking, chrome alloy steel, Superagriseal unit plus centrifuging ring)
  - Type C (grub screws shaft locking, stainless steel AISI 420, Superagriseal unit plus rubberised centrifuging ring)
  - Type A (grub screws shaft locking, chrome alloy steel, Superagriseal unit)
  - Prelubricated with lithium / calcium grease
  - Can be relubricated.

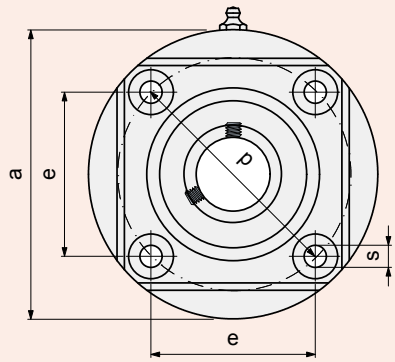

Version with bearing **Type B**

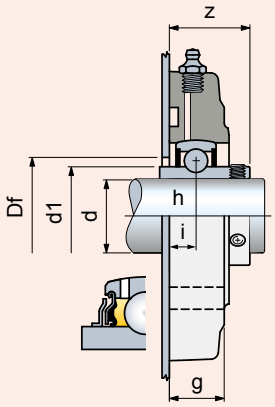

Version with bearing **Type C**

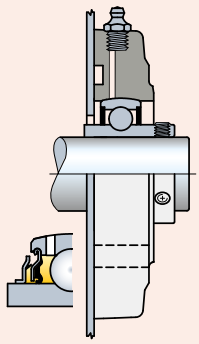

Version with bearing **Type A**

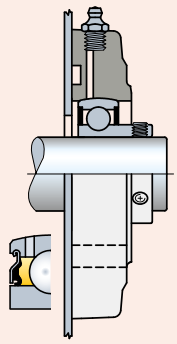

dia. **d** mm	Series	Housing material **Polyamide PA FV** Standard Flange (black) **Code**	Dimensions in mm e	a	p	s	g	i	h	z	d1	Bore in frame Df mm	Bearing	Weight Kg
Version with bearing Type B														
35	UCFC 207	**60752**	77,8	137	110	11	26	12,3	17,5	37,7	46,1	50	Type B	0,75
Version with stainless steel bearing Type C														
35	UCFC 207	**646652**	77,8	137	110	11	26	12,3	17,5	37,7	46,1	50	Type C	0,75
Version with bearing Type A														
35	UCFC 207	**681822**	77,8	137	110	11	26	17,3	17,5	40,8	46,1	50	Type A	0,75

Item code for order = B0000 + Code
Packaging: 6 pieces.

Round flange bearing units

SBF

Stainless steel AISI 304 flange
Stainless steel bearing Type C
AISI 420 stainless steel bearing with 2 rubberised rings, provides excellent seal against humidity, steams, liquids, medium corrosive chemical agents.
Load capacity
The pressed steel flanged support is suitable for light duties.

- **Material**
  Pressed stainless steel AISI 304 flanges.
- **Continuous operating temperature**
  in air: - 20 to + 60°C.
- **Maximum allowed misalignment:** 5°.
- **Bearing**

- Type C (grub screws shaft locking)
- stainless steel AISI 420
- Superagriseal unit plus rubberised centrifuging ring
- Prelubricated with lithium / calcium grease
- Can be relubricated.

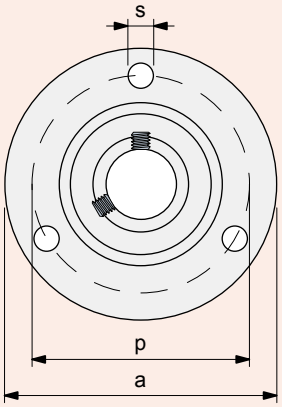

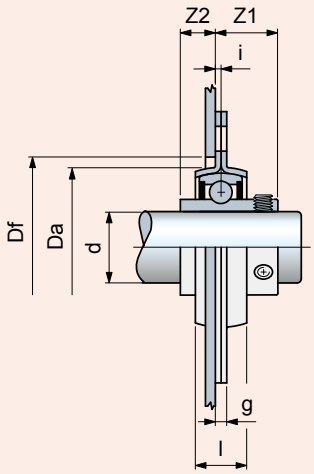

dia. **d** mm	Series	Housing material **Stainless Steel AISI 304** Code	Dimensions in mm p	a	s	g	i	l	Z1	Z2	Da	Bore in frame Df mm	Bearing	Weight Kg
25	SBF 205	**604562**	76	95	8,7	4	2	18	21,8	12,3	56	60	Type C	0,35

Packaging: 4 pieces.

Spare parts

UCF/C - SUCF/C - HCF/C - SHCF/C - UCF/CL - SUCF/CL - HCF/CL - SHCF/CL - UCF - SUCF - HCF - SHCF - UCFS/C - SUCFS/C - HCFS/C - SHCFS/C - UCFL/C SUCFL/C - HCFL/C - SHCFL/C - UCFL/CL - SUCFL/CL - HCFL/CL - SHCFL/CL - UCFL - SUCFL - HCFL - SHCFL - UCFLS/C - SUCFLS/C - HCFLS/C - SHCFLS/C

Seal

Ball type greasing nipple

dia. d mm	Housing material: Polyamide PA FV Standard Flange (black)	Housing material: Polypropylene PP FV Solid Flange (white)
	Code	Code
Seal		
17	696152	696152
20	632151	632151
25	608941	608941
30	68416	68416
35	641111	641111
40	632141	632141
40*	603622	603622
45*	686832	686832
50*	686842	686842
Ball type greasing nipple		
	64437	63617

*** = Version with special fixing holes.**
Material: seal in NBR rubber (black).
Ball type nickel plated brass greasing nipple for PA FV version, ball type stainless steel AISI 316 for PP FV version.

F - SF - FL - FC

Seal

Ball type greasing nipple

dia. d mm	Housing material: Polyamide PA FV Standard Flange (black)	Housing material: Polypropylene PP FV Standard Flange (black)
	Code	Code
Seal		
25	603642	603642
30	603662	603662
35	603682	603682
40	603702	603702
45	603722	603722
45*	603742	603742
Ball type greasing nipple		
	64437	63617

*** = Version with special fixing holes.**
Material: seal in NBR rubber (black).
Ball type nickel plated brass greasing nipple for PA FV version, ball type stainless steel AISI 316 for PP FV version.

SUCFN/T - SHCFN/T - SUCFN/TL - SHCFN/TL - UCFN/C - SUCFN/C - HCFN/C - SHCFN/C - UCFN/CL - SUCFN/CL - HCFN/CL - SHCFN/CL - UCFN - SUCFN HCFN - SHCFN - UCFX/T - SUCFX/T - HCFX/T - SHCFX/T - UCFLN/C - SUCFLN/C - HCFLN/C - SHCFLN/C - UCFLN/CL - SUCFLN/CL - HCFLN/CL - SHCFLN/CL UCFLN - SUCFLN - HCFLN - SHCFLN - UCPA/C - HCPA/C - UCPA - HCPA - UCFB/C - HCFB/C - UCFB - HCFB - UCT/C - HCT/C - UCT - HCT

Seal

Ball type greasing nipple

dia. d mm	Housing material: Polyamide PA FV Standard Flange (black)	Housing material: Polypropylene PP FV Solid Flange (white)
	Code	Code
Seal		
17	696152	696152
20	632151	632151
25	608941	608941
30	68416	68416
35	641111	641111
40	632141	632141
Ball type greasing nipple		
	665422	665432

Material: seal in NBR rubber (black).
Ball type nickel plated brass greasing nipple for PA FV version, ball type stainless steel AISI 316 for PP FV version.

Technical information

Bearing unit max. static load B68

Bearings

- Bearings with grub screw locking system B72
- Bearings with self locking eccentric collar B72
- Seals B73
- Maximum velocities B73
- Axial load capacities B73
- Self aligning ball bearings, holding by shoulders on shaft B73

Calculation data

- Definition of bearing dimensions B74
- Calculation method for self-aligning bearings B74
- Life B74
- Life expectation calculation B74
- Equivalent dynamic load calculation B75
- Static load capacity control B76
- Equivalent static load calculation B76

Lubrication

- Prelubrication B77
- Lubrication grease B77
- Relubrication B77
- Relubrication intervals B77

Grease life in bearings lubricated for life

- Formula to calculate grease life B78
- Diagram 1 grease nominal life B78
- Diagram 2 correction factor B79
- Example of calculation B79

Shaft tolrances

- Shaft tolerances for bearings with grub screws or eccentric collar locking system B80
- Shaft tolerances for bearings with shoulders type holding system B80

Mounting

- Mounting recommendations B81
- Bearing locking by grub screws B81
- Bearing locking by eccentric collar B81
- Installation/removal of covers B81

Bearing unit max. static load

UCF/C - SUCF/C - HCF/C - SHCF/C - UCF/CL - SUCF/CL HCF/CL - SHCF/CL - UCF - SUCF - HCF - SHCF

Shaft dia. d mm	PA FV N	PP FV N	PA FV N	PP FV N
25	19550	13800	20700	11500
30	19550	13800	20700	11500
35	20700	13800	25300	13800
35*	19550	13800	20700	11500
40	20700	14375	25300	13800
40*	19550	13800	20700	11500
45*	32000	24000	35000	26000
50*	32000	24000	35000	26000

*** = Version with special fixing holes**

UCFS/C - SUCFS/C - HCFS/C - SHCFS/C

Shaft dia. d mm	PA FV N	PA FV N
30	20700	25300
35*	20700	25300
40*	20700	25300

*** = Version with special fixing holes**

F - SF

Shaft dia. d mm	PA FV N	PP FV N	PA FV N	PP FV N	PA FV N	PP FV N
30	21850	16100	17250	13800	8050	5750
35	21850	16100	17250	13800	18400	10350
40	21850	17250	17250	13800	19550	13800
40*	21850	16100	17250	13800	18400	10350
45	23000	17250	18400	14350	19550	13800
45*	21850	16100	17250	13800	18400	10350

*** = Version with special fixing holes**

Bearing unit max. static load

UCFLN/C - SUCFLN/C - HCFLN/C - SHCFLN/C
UCFLN/CL - SUCFLN/CL - HCFLN/CL - SHCFLN/CL

Shaft dia. d mm	PA FV N	PP FV N	PA FV N	PP FV N
17	9775	6325	9775	6900
20*	9775	6325	9775	6900
25*	10925	7475	11500	7475
30	14950	9200	14375	11500
30*	14950	9200	14375	11500

*** = Version with special fixing holes**

UCFLN - SUCFLN - HCFLN - SHCFLN

Shaft dia. d mm	PA FV N	PP FV N	PA FV N	PP FV N
17	9775	6325	9775	6900
20*	9775	6325	9775	6900
25*	10925	7475	11500	7475
30	14950	9200	14375	11500
30*	14950	9200	14375	11500

*** = Version with special fixing holes**

UCFL/C - SUCFL/C - HCFL/C - SHCFL/C - UCFL/CL - SUCFL/CL
HCFL/CL - SHCFL/CL - UCFL - SUCFL - HCFL - SHCFL

Shaft dia. d mm	PA FV N	PP FV N	PA FV N	PP FV N
17	9775	6325	9775	6900
20	9775	6325	9775	6900
25	10925	7475	11500	7475
25*	10925	7475	11500	7475
30	14950	9200	14375	11500
30*	14950	9200	14375	11500
35	14950	9200	13225	10925
35*	14950	9200	14375	11500
40	14950	9775	14950	10925
40*	14950	9200	14375	11500

*** = Version with special fixing holes**

UCFLS/C - SUCFLS/C - HCFLS/C - SHCFLS/C

Shaft dia. d mm	PA FV N	PP FV N
30	14950	14375
35*	14950	13225
40*	14950	14950

*** = Version with special fixing holes**

FL

Shaft dia. d mm	PA FV N	PP FV N	PA FV N	PP FV N	PA FV N	PP FV N
25	9200	6900	11500	8625	12650	5750
30	11500	6900	12650	9200	13800	5750
35	11500	9200	12650	9200	9200	4600
40	12650	9200	12650	9200	13800	6900
45	12650	9200	13800	9775	17250	12650

Bearing unit max. static load

UCFX/T - SUCFX/T - HCFX/T- SHCFX/T

UCP/C - HCP/C - UCP - HCP

Shaft dia. d mm	PA FV N	PP FV N	PA FV N	PP FV N	PA FV N	PP FV N
20	4600	2070	20700	5750	5750	3450
25	6900	2070	20700	5750	6900	3450
30	8050	2300	28750	8050	9200	4600
35	9200	2530	31050	8625	11500	4830
40	9200	2530	31050	8625	11500	4830

UCPA/C - HCPA/C - UCPA - HCPA

Shaft dia. d mm	PA FV N	PP FV N	PA FV N	PP FV N	PA FV N	PP FV N	PA FV N	PP FV N
17	2500	1500	8000	3750	1500	1100	1250	1000
20	2500	1700	6750	4300	2300	1200	1100	750
25	3000	1700	10500	5200	2600	1750	1100	900

UCFB/C - HCFB/C - UCFB - HCFB

Shaft dia. d mm	PA FV N	PP FV N	PA FV N	PP FV N
20	3000	1700	1000	650
25	3500	2000	1000	650
30	3500	2000	1000	650
35	4000	2500	1000	650
40	5200	3000	1000	650

UCT/C - HCT/C - UCT - HCT

Shaft dia. d mm	PA FV N
20	16000
25	24000
30	27000

Bearing unit max. static load

UCFC/C - UCFC

Shaft dia. d mm	PA FV N	PP FV N	PA FV N	PP FV N
35	19550	12650	23000	11500

FC

Shaft dia. d mm	PA FV N	PP FV N	PA FV N	PP FV N	PA FV N	PP FV N
35	17250	11500	17250	11500	23000	12650

Bearings

Bearings with grub screw locking system

Prelubricated with long lasting lithium/calcium grease • Can be rilubricated

Type **A**

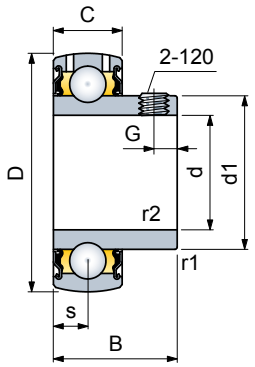

d mm	d1	Dimensions in mm D	B	C	s	G	r1, r2 min.	Grub screws	Load coefficient dyn.[1] C N	stat. Co N	Weight Kg
17	24,6	40	22	12	6	4	0,3	M5x0,8	9500	4750	0,07
20	29	47	25	14	7	5	0,6	M6x1	12700	6550	0,11
25	34	52	27	15	7,5	5,5	0,6	M6x1	14000	7800	0,14
30	40,3	62	30	16	8	6	0,6	M6x1	19500	11200	0,23
35	48	72	32	17	8,5	6,5	1	M6x1	25500	15300	0,31
40	53	80	34	18	9	7	1	M8x1	30700	19000	0,43
45	57,2	85	41,2	19	10,2	8,2	1	M8x1	33200	21600	0,48
50	61,8	90	43,5	20	10,9	9,2	1	M8x1	35100	23200	0,54

Chrome alloy steel.
[1] = Values are valid for applications with ≤ h 6 shaft tolerance.
Time 0.77 values must be considered in all other cases.

Type **B**

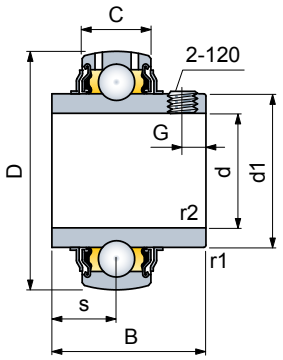

d mm	d1	Dimensions in mm D	B	C	s	G	r1, r2 min.	Grub screws	Load coefficient dyn.[1] C N	stat. Co N	Weight Kg
17	24,2	40	27,4	12	11,5	3,5	0,3	M6x0,75	9500	4750	0,09
20	29	47	31	16	12,7	4,7	0,6	M6x1	12700	6550	0,14
25	34	52	34,1	17	14,3	5,5	0,6	M6x1	14000	7800	0,17
30	40,3	62	38,1	19	15,9	5,5	0,6	M6x1	19500	11200	0,28
35	48	72	42,9	20	17,5	6,5	1	M8x1	25500	15300	0,41
40	53	80	49,2	21	19	8	1	M8x1	30700	19000	0,55
45	57,2	85	49,2	22	19	8	1	M8x1	33200	21600	0,60
50	61,8	90	51,6	23	19	9	1	M10x1	35100	23200	0,69

Chrome alloy steel.
[1] = Values are valid for applications with ≤ h 6 shaft tolerance.
Time 0.77 values must be considered in all other cases.

Type **C** stainless steel

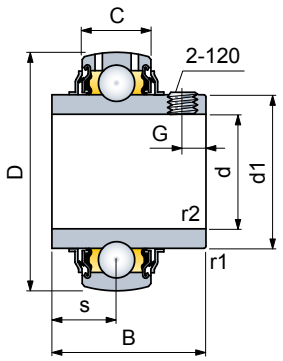

d mm	d1	Dimensions in mm D	B	C	s	G	r1, r2 min.	Grub screws	Load coefficient dyn.[1] C N	stat. Co N	Weight Kg
20	29	47	31	17	12,7	5	0,6	M6x1	10800	6550	0,14
25	34	52	34,1	17	14,3	5	0,6	M6x1	11900	7800	0,18
30	40,3	62	38,1	19	15,9	6	0,6	M6x1	16250	11200	0,29
35	48	72	42,9	20	17,5	6	1	M6x1	21600	15300	0,42
40	53	80	49,2	21	19	8	1	M8x1	26000	19000	0,56

Stainless steel AISI 420.
[1] = Values are valid for applications with ≤ h 6 shaft tolerance.
Time 0.77 values must be considered in all other cases.

Bearings with self locking eccentric collar

Prelubricated with long lasting lithium/calcium grease • Can be rilubricated • Higher resistance to vibrations • Suitable for single directional travel (cannot reverse the sense of rotation) • Locking of the bearing is achieved by rotating the eccentric collar. The grub screw holds the collar and avoids rotation.

Type **D**

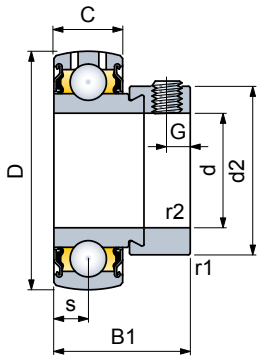

d mm	d2	Dimensions in mm D	B1	C	s	G	r1, r2 min.	Grub screws	Load coefficient dyn.[1] C N	stat. Co N	Weight Kg
17	28,6	40	28,6	12	6,5	4,75	0,3	M6x0,75	9500	4750	0,10
20	33,3	47	30,9	14	7,5	5	0,6	M6x1	12700	6550	0,16
25	38,1	52	30,9	15	7,5	5	0,6	M6x1	14000	7800	0,18
30	44,5	62	35,7	16	9	6	0,6	M6x1	19500	11200	0,30
35	51,9	72	38,9	17	9,5	6,5	1	M8x1	25500	15300	0,49
40	60,3	80	43,7	18	11	6,5	1	M8x1	30700	19000	0,62
45	63,5	85	43,7	19	11	6,5	1	M8x1	33200	21600	0,65
50	69,9	90	43,7	20	11	6,5	1	M8x1	35100	23200	0,70

Chrome alloy steel.
[1] = Values are valid for applications with ≤ h 6 shaft tolerance.
Time 0.77 values must be considered in all other cases.

Bearings

Seals

Type A - D. The system consists of a metallic ring fitted with a low friction rubber sealing lip.
Type B. The system is further equipped with a metallic protection ring providing a centrifugal sealing action.
Type C inox. The upper lip of the centrifuging ring together with the grease trapped between the base seal and the ring it self guarantees maximum sealing capacity.

Type A - D

Metal ring with sealing lip

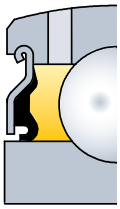

Type B

Centrifuging ring

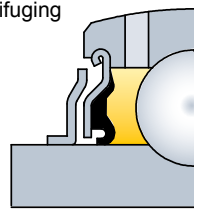

Type C Inox

Rubberised centrifuging ring

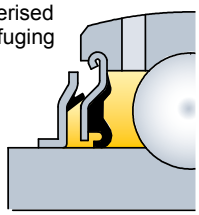

Maximum velocities

The table indicates the values for **A**, **D**, **B** series bearings • Stainless steel bearings of the **C** Type (rubberised centrifuging ring) must not be operated at velocities in excess of 60% of the values indicated • The maximum velocity is dependant of the shaft tolerances. Higher tolerances require lower speed

Int. dia. bearing d mm	Shaft tolerance				
	h6	h7	h8	h9	h11
	Speed (RPM)				
17	9500	6000	4300	1500	950
20	8500	5300	3800	1300	850
25	7000	4500	3200	1000	700
30	6300	4000	2800	900	630
35	5300	3400	2200	750	530
40	4800	3000	1900	670	480
45	4300	2600	1700	600	430
50	4000	2400	1600	560	400

Axial load capacities

The bearing locking systems by grub screws/eccentric collars, allow axial loads up to 20% of the dynamic load coefficient (only with non hardened shafts and grub screws tightened as recommended) • For bearings of the **A**, **D**, **B**, **C**, series it is not recommended to exceed the value of: 0,25•C

Self aligning ball bearing holding by shoulders on shaft

The bearings have double row of balls running on a spherical outer race This configuration renders the bearing self aligning • The bearings are supplied without sealing units • They are held into position by shoulders on the shaft.

Type **1200**

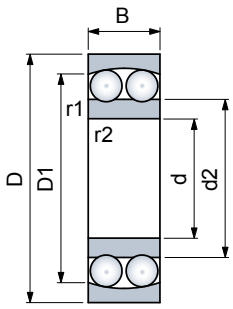

d mm	Bearing type	Dimensions in mm D	B	d2	D1	r1, r2 min.	Load coefficient dyn. C N	stat. Co N	Revolutions RPM	Weight Kg
20	1204	47	14	28,9	41	1	12700	3400	15000	0,12
25	1205	52	15	33,3	45,6	1	14300	4000	13000	0,14
30	1206	62	16	40,1	53	1	15600	4650	10000	0,22
35	1207	72	17	47	62,3	1,1	19000	6000	9000	0,32
40	1208	80	18	53,6	68,8	1,1	19900	6950	8500	0,42

Calculation data

Bearing dimensioning

The bearing dimensions, for a given application, should be chosen on the basis of the loads to be supported, expected service life and reliability. In most cases the reason for choosing a bearing is the fact that the shaft has already been sized during the design of the plant.

Calculation procedures for self-aligning bearings

The calculation procedure for self-aligning bearings consists in ensuring a satisfactory operating life of the unit:

1) The nominal service life is calculated using the formulas indicated below, keeping in mind the type of stress on the bearing (dynamic or static).
2) The nominal life of the bearing should reflect the expected service life of the plant as indicated in Table 1 hereunder.

Service life

The dimensioning of the bearing requires the knowledge of the appropriate life expectancy of the project in relation to the specific application. This depends on the type of plant, daily/yearly working hours and on the required reliability.
In the absence of practical experience Table 1 gives our recommendations of the average expected plant life under various conditions.

Table 1 - Recommended plant expected life L_{10h} for MB support bearings

Plant type	Plant expected life L_{10h} hours
Seasonal Operation plants	4000 ÷ 8000
Daily operated plant, 8 hours/day, not completely utilised	10000 ÷ 20000
Daily operated plant, 8 hours/day, completely utilised	20000 ÷ 30000
Daily operated plant, 24 hours/day	40000 ÷ 80000

Dynamically stressed bearings
Bearings which rotate under load are considered dynamically stressed (one ring of the bearing makes one full rotation against the other). In most cases, self-aligning supports are dynamically stressed.

Expected life calculation formula

The service life of a bearing is expressed in the number of revolutions or hours of operations which can be expected without breakdown (erosion or laminations of the bearing revolving parts).

The calculating procedure for nominal duration is valid whatever the type of bearing:

$$L_{10} = \left(\frac{C}{P}\right)^3 \text{ Life in Millions revolutions.}$$

When bearings rotate at constant speed it is more practical to calculate the life in number of hours:

$$L_{10h} = \frac{16666}{n} \cdot \left(\frac{C}{P}\right)^3 \text{ Life in hours.}$$

L_{10} = life in millions of revolutions.
L_{10h} = life in hours.
C = dynamic load coefficient (N). Values are indicated in the support dimensional tables.
P = equivalent dynamic load (N). See calculation formula on Table 2.
n = revolutions (RPM).

Correct expected life

In the majority of cases, for self alinging MB bearings, it is sufficient to calculate L_{10}, L_{10h} using the formula indicated above. The new theory of life calculation permits to establish the correct life expectancy keeping into consideration the effects of lubrication, pollution of solid particles and of the fatigue limit load Pu (values are reported in the bearing tables). The calculation of the correct expected life requires therefore the assistance of the technical commercial staff.

Calculation data

Equivalent dynamic load P calculation

Table 2 - Equivalent dynamic load P calculation

Bearing Type	Load direction on the bearing	Equivalent dynamic load P (N) calculation formula
A B C D	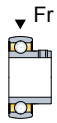	**P = Fr**
	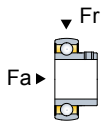	**P = X • Fr + Y • Fa**
1200	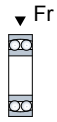	**P = Fr**
	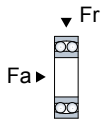	**P = Fr + Y1 • Fa** with $\frac{Fa}{Fr} \leq e1$ **P = 0,65 • Fr + Y2 • Fa** with $\frac{Fa}{Fr} > e1$

P = equivalent dynamic load (N).
Fr = radial load acting on the bearing (N).
Fa = axial load acting on the bearing (N).
x, Y = load factors. See Table 3.
e1, Y1, Y2 = factors. See Table 4.

Table 3 - Load factors x, y

Ratio $\frac{Fa}{Co}$	e	With: $\frac{Fa}{Fr} \leq e$ x	With: $\frac{Fa}{Fr} \leq e$ y	With: $\frac{Fa}{Fr} > e$ x	With: $\frac{Fa}{Fr} > e$ y
0,025	0,22	1	0	0,56	2
0,04	0,24	1	0	0,56	1,8
0,07	0,27	1	0	0,56	1,6
0,13	0,31	1	0	0,56	1,4
0,25	0,37	1	0	0,56	1,2
0,5	0,44	1	0	0,56	1

Co = Static load coefficient (N).
The values are indicated in the support dimensional tables.

Table 4 - Factors e1, Y1, Y2, Yo

Int. dia. bearing mm	e1	Y1	Y2	Yo
20	0,30	2,1	3,3	2,2
25	0,28	2,2	3,5	2,5
30	0,25	2,5	3,9	2,5
35	0,23	2,7	4,2	2,8
40	0,22	2,9	4,5	2,8

Operating conditions coefficients

It should be common practice to include operational factors when calculating bearing dimensions to allow for load variations which may happen during running of the plant. The coefficients given here under are indicative only and are based on actual operational experience.

With steady loads/light impacts: multiply the equivalent dynamic load P by: 1,2 ÷ 1,5
With loads and medium impacts: multiply the equivalent dynamic load P by: 1,7 ÷ 2,0

Calculation data

Static load capacity control

Statically stressed bearings

In rolling-contact bearing technology the condition of static load is considered to exists when:
- The bearing does not rotate and is subjected to permanent loads or intermittent ones (impacts).
- The bearing is subjected to loads and slow oscillating movements.
- The bearing rotates under load at a very low speed and for short periods.
- The bearing rotates under load and must withstand strong impacts acting in the course of one revolution.

The static safety coefficient fs must not exceed the recommended values given in Table 5 in order to obtain a satisfactory performance of the bearings. Coefficient fs gives the safety margin against excessive permanent deformation of the revolving parts of the bearing.

$$fs = \frac{Co}{Po}$$

fs = static safety coefficient.
Co = static load coefficient (N). The values are given in the support dimensional tables.
Po = equivalent static load (N). See calculation formula given below.

Table 5 - Static safety coefficient fs for MB bearings

Type of operation	Revolving bearings			Non revolving bearings
	Noise level not important	Normal noise level operation	Low noise level operation	
Smooth operation without vibration	5	1	2	0,4
Normal operation	0,5	1	2	0,5
Impact loads operation	≥ 1,5	≥ 1,5	≥ 2	≥ 1

Equivalent static load Po calculation

Bearing type	Load direction on the bearing	Equivalent dynamic load P (N) calculation formula
A **B** **C** **D**	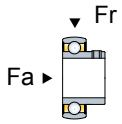	**Po = 0,6 • Fr + 0,5 • Fa** If Po < Fr, then assume Po = Fr.
1200	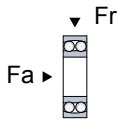	**Po = Fr + Yo • Fa**

Po = equivalent static load (N).
Fr = radial load on the bearing (N).
Fa = axial load on the bearing (N).
Yo = see table 4.

Lubrication

Prelubrication

All self-aligning bearings are supplied factory lubricated.

Warning
The first lubrication must be carried out only for bearings of the series FL - F - FC held by the shaft shoulders.

Lubricating grease

Bearings are prelubricated with long lasting lithium/calcium grease.

Technical data	NLGI consistency:	2
	Emulsifier:	lithium/calcium
	Base oil:	mineral
	Base oil viscosity:	165 mm^2/s at 40°C
	Operating temperature:	- 20°C to +120°C
	Water resistance:	Recommended
	Antioxidant properties:	Recommended

Relubrication

All self-aligning bearing units are equipped with a grease nipple of the ball type to allow periodical relubrication of the bearing.

Warning
- Do not grease at first assembly.
- The first lubrication must be carried out only for bearings of the series FL - F - FC held by the shaft shoulders.
- Stainless steel pressed metal supports of the series SBF are not relubricatable.
- Use only grease of same characteristics as indicated.
- Clean greasing nipple before each greasing operation.
- Inject grease slowly until it comes out from the bearing.
  Keep the bearing rotating and do not apply excessive pressure which could damage the sealing units.
- More frequent greasing operations with smaller quantities of grease are to be preferred.

Relubrication intervals

Relubrication intervals vary according to actual operating conditions.
Very often during operation, load, speed, temperature and ambient conditions (humidity, dust)
may vary making it difficult to establish exact rules.
Experience once again gives the best answer:

- Light operating conditions: relubricate every 6 months.
- Normal operating conditions: relubricate every 1÷3 months.
- Heavy operating conditions: relubricate every 2 weeks.

Grease life in bearings lubricated for life

(dry use recommended)

Formula to calculate grease life in bearings lubricated for life

This procedure allows to calculate the grease life as a function of its quality and bearing type, dimension, rotating speed, applied loads and working temperature.

$$L_h = L_{10} \times Fc \quad \text{Grease life (hours)}$$

L_h = Grease life (hours).
L_{10h} = Grease nominal life (hours). See Diagram 1.
Fc = Correction factor. See Diagram 2.

Diagram 1
- Grease nominal life L_{10h}

This diagram allows to determine the nominal grease life L_{10h} (hours), as a function of rotating speed **n** (rpm), mean diameter **dm** (mm), bearing working temperature (°C). Greases are classified by a factor GPF (Grease Performance Factor), related to their temperature performance. In this table we consider a grease with GPF = 1, which is the grease used in all Marbett LifeLube bearings.

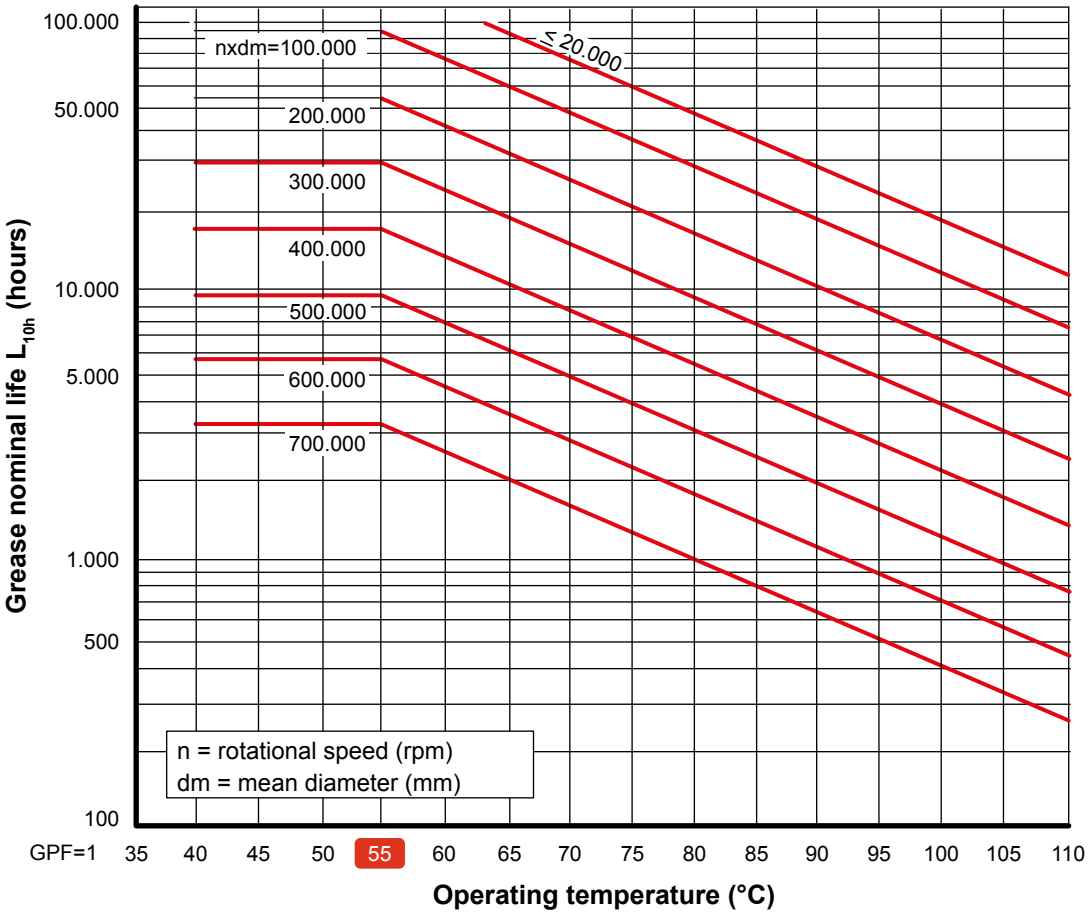

dm (mm)= mean diameter.

Type **A**

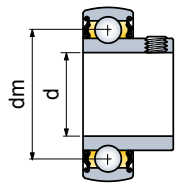

Type **D**

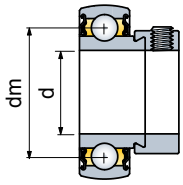

dia. d mm	dia. dm mm
17	28,5
20	33,5
25	38,5
30	46
35	53,5
40	60
45	65
50	70

55 = At room temperature, with normal working conditions, the grease works at a temperature lower than 55°C.

Grease life in bearings lubricated for life

(dry use recommended)

Diagram 2 - Correction factor Fc

The corrective factor Fc, keeps into cosideration the influence of load applied on bearings as a function of load ratio C/P.
With low loads (C/P ≥ 15) the duration of the grease is not influenced by load values.

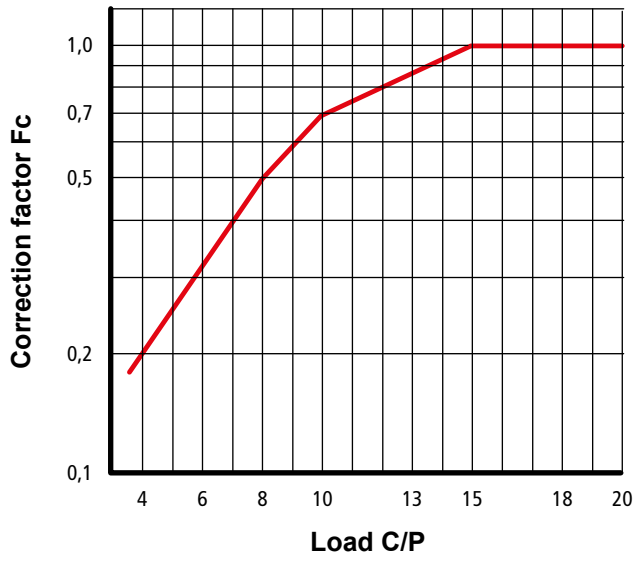

C = Dynamic load coefficient (N).
Values are indicated in the bearings dimensional tables.
P = Equivalent dynamic load (N).
See Table 2.

Example of calculation

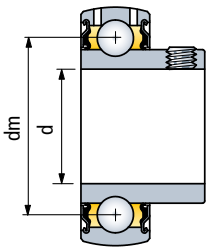

Data:
- Bearing Type **A**.
- d = 40 mm (shaft dia.).
- dm = 60 mm. (bearing mean dia.).
- n = 300 rpm. (rotational speed).
- 55 ºC (grease operating temperature).
- C = 23600 N (Dynamic load coefficient).
- P = 3000 N (equivalent dynamic load).

- From Diagram 1, as a function of:
  n x dm = 300 rpm x 60 mm = 18000
  we read a nominal grease life of:
  L_{10h} = 100000 hours.

- From Diagram 2, as a function of:
  C/P = 23600 N: 3000 N = 7,8
  we read a corrective factor of:
  Fc = 0,5.

- Calculation of estimated grease life:
  $L_h = L_{10h}$ x Fc = 100000 hours x 0,5 = 50000 hours.

Shaft tolerances

Tolerances for grub screws/ eccentric collar locked bearings

- The tables indicate shaft diameter tolerances.
- Shaft ends must be rounded off in order to:
  - ease assembly and avoid bearing jamming.
  - avoid damages to the rubber parts of the sealing units.
- The shaft surface for the portion in contact with the sealing gaskets must be smooth and free of defects (scratches etc.).

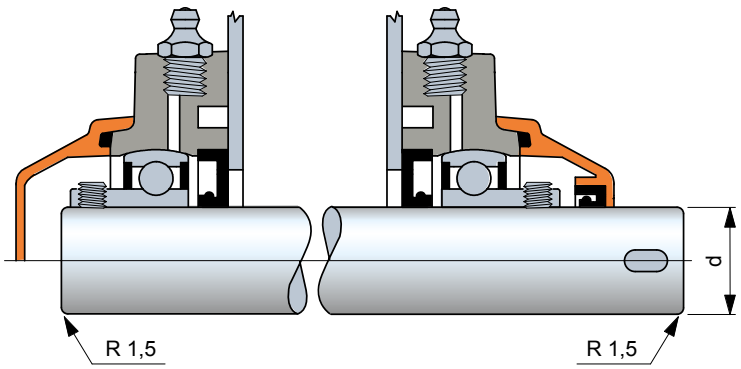

ISO shaft tolerance

Shaft dia. d	Heavy loads High speed		Normal operation		Light loads Low speed		Simple applications					
	h 6		h 7		h 8		h 9		h 10		h 11	
mm	plus	min.	plus	min.	plus	min.	plus	min.	plus	min.	plus	min.
17	0	-11	0	-18	0	-27	0	-43	0	- 70	0	-110
20 ÷ 30	0	-13	0	-21	0	-33	0	-52	0	- 84	0	-130
35 ÷ 50	0	-16	0	-25	0	-39	0	-62	0	-100	0	-160

Tolerances in µm

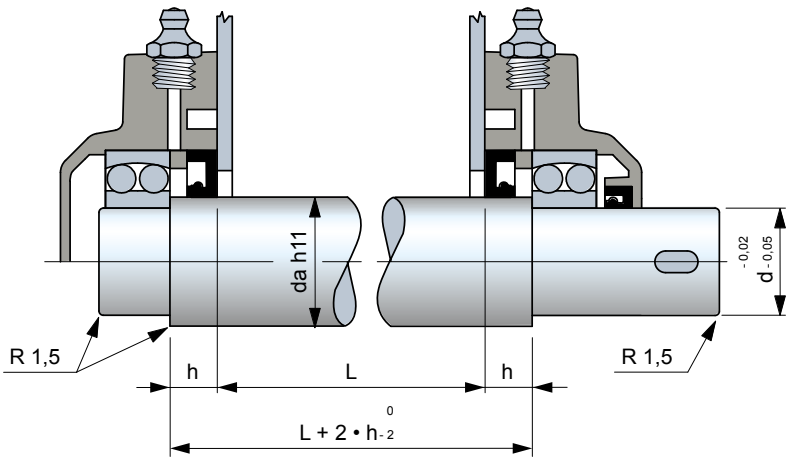

h values are given in the support dimensional tables

Tolerances for shaft shoulders locked bearings

- Shaft ends must be rounded off in order to:
  - ease assembly and avoid bearing jamming.
  - avoid damages to the rubber parts of the sealing units.
- The shaft surface for the portion in contact with the sealing gaskets must be smooth and free of defects (scratches etc.).
- The mounting shaft/bearing is free to facilitate assembly.
  For heavy radial loads conditions it is recommended a slightly tight mounting.

Mounting

Assembly instructions

1 - With waterproof bearings the rubber sealing units must be greased before mounting to avoid initial dry running on the shaft. The grease must fill only the space in between the two sealing lips.
2 - The bearing must be locked onto the shaft after the support mounting flange has been fully tightened. This is necessary to allow the bearing to assume its correct alignment on the shaft without undue axial stresses. Always tighten the screws diagonally.

Locking of the bearing by grub screws

3 - The table gives the recommended maximum tightening couples for the grub screws and the size of the hexagonal to use.

Int. dia. bearing mm	Sc. driver size mm			Max. tightening couple Nm		
	Bearings		Bearings	Bearings		Bearings
	A	**A C**	**D**	**A**	**A C**	**D**
17	2,5	3	3	3,5	4	4
20	3	3	3	4	4	4
25	3	3	3	4	4	4
30	3	3	3	4	4	4
35	3	4	4	4	6,5	6,5
40	4	4	4	6,5	6,5	6,5
45	4	4	4	6,5	6,5	6,5
50	4	5	4	6,5	16,5	6,5

Locking of the bearings by eccentric collar

4 - Tighten the collar by turning it with a punch in the same direction as the rotation of the shaft.
5 - Hand tighten the grub screw. The screw driver dimension and the tightening couple are given in the table above (Ref. **D** series bearings).

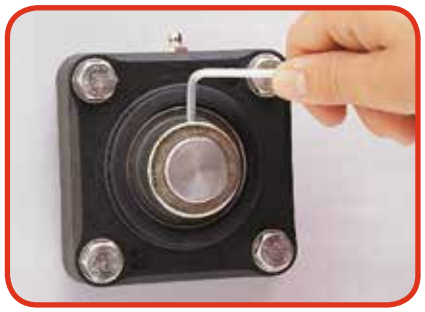

Assembly / removal of the protection cover

6 - Assembly. The sealing unit of open end covers must be greased to avoid initial dry running on the shaft. The grease must fill only the space in between the two sealing lips.
7 - Removal. Insert a screw driver into the groove provided for and force the cover out.